Test Equipment Depot
1-800-517-8431
View at www.TestEquipmentDepot.com

Task Light Classics

LIE

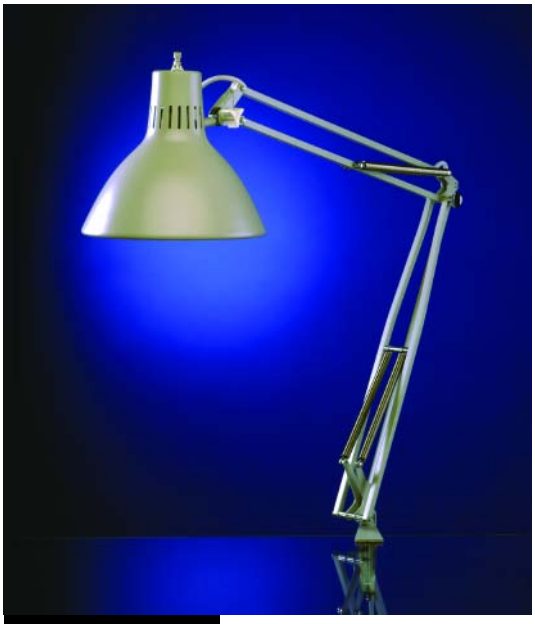

LSIA

LCIA

LBIA

The right light

LUXO

CLASSICS

The Classic task lights all combine classic styling with superior arm technology. All series have spun aluminum shades with exterior springs used to balance the task light.

L1 - The original adjustable arm task light designed in 1937 is still popular today.

LC Series - One of the most widely used task lights in the world combines an incandescent lamp with a circline fluorescent for a balance of high light output with good color rendition.

LS Series - Luxo's most versatile and best selling task light utilizes an internal reflector to allow for higher wattage lamp usage with minimal heat.

LB Series - A gracefully shaped small head makes this the ideal task light for smaller areas.

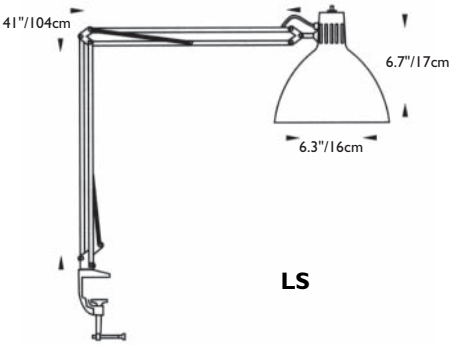

LS

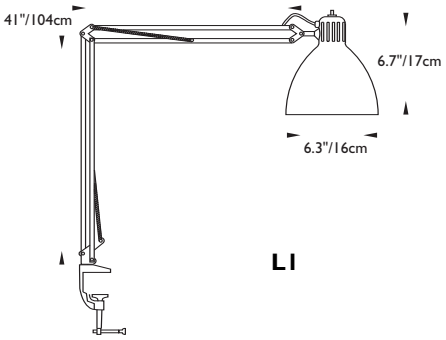

L1

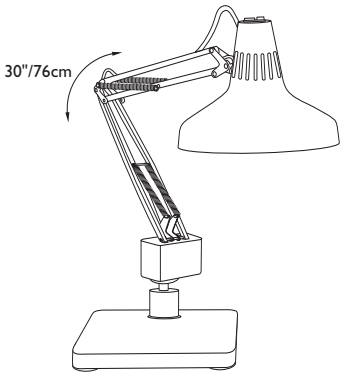

LC2FE

TECHNICAL SPECIFICATIONS

Lamp:	**L1:** max 60W incandescent
	LC: max 60W incandescent
	with 22 circline fluorescent
	LS: max 100W incandescent
	LB: max 60W incandescent
Electrical:	**All series:** wired for 120V,
	60Hz operation.
	UL/CUL listed.
Ballast:	**LC:** Magnetic ballast
	Class A sound rated
Power Cord:	**All:** Minimum 6' long
	L1: 2 conductor cord
	All others: 3-conductor cord
Shade:	Heavy-duty spun aluminum
Arm Type:	**All:** powder-painted metal
	arm with external springs
Mounting:	**A:** Edge clamp bracket
	DB: Adjustable angle
	drafting board bracket
	FE: Weighted base for LC2
	E: Weighted base for L1
	and LS1
Finish:	**L1:** Black (BK),
	White (WT),
	Metallic Gray (MG)
	LS: Chrome (CH),
	Clear Gloss (CG)
	All others: Black (BK),
	White (WT),
	Light Gray (LG)

PROJECT INFORMATION

Job Name:

Location:

Fixture Type:

ORDERING GUIDE

Model No.	Description
L1 (add color - BK, WT, MG)	
L1A	L1 with edge clamp
L1E	L1 with weighted base
LC (add color - BK, WT, LG)	
LC1A	45" arm w/edge clamp
LC2A	30" arm w/edge clamp
LC1DB	45" arm w/DB bracket
LC2FE	30" arm w/base
LS (add color - BK, WT, LG, CH, CG)	
LS1A	45" arm w/edge clamp
LS2A	30" arm w/edge clamp
LS1E	45" arm w/base
LS2E	30" arm w/base
LB (add color - BK, WT, LG)	
LB1A	45" arm w/edge clamp
LB2A	30" arm w/edge clamp

EPA Green Lights
an Energy Star program
Ally