FLUKE®

Test Equipment Depot - 800.517.8431 - 99 Washington Street Melrose, MA 02176 - TestEquipmentDepot.com

Model 88 V

Automotive Multimeter

Users Manual

PN 2166623
August 2004, Rev. 1, 1/06
© 2004, 2006 Fluke Corporation. All rights reserved. Printed in USA
All product names are trademarks of their respective companies.

LIMITED WARRANTY AND LIMITATION OF LIABILITY

Each Fluke 20, 70, 80, 170 and 180 Series DMM will be free from defects in material and workmanship for its lifetime. As used herein, “lifetime” is defined as seven years after Fluke discontinues manufacturing the product, but the warranty period shall be at least ten years from the date of purchase. This warranty does not cover fuses, disposable batteries, damage from neglect, misuse, contamination, alteration, accident or abnormal conditions of operation or handling, including failures caused by use outside of the product’s specifications, or normal wear and tear of mechanical components. This warranty covers the original purchaser only and is not transferable.

For ten years from the date of purchase, this warranty also covers the LCD. Thereafter, for the lifetime of the DMM, Fluke will replace the LCD for a fee based on then current component acquisition costs.

To establish original ownership and prove date of purchase, please complete and return the registration card accompanying the product, or register your product. Fluke will, at its option, repair at no charge, replace or refund the purchase price of a defective product purchased through a Fluke authorized sales outlet and at the applicable international price. Fluke reserves the right to charge for importation costs of repair/replacement parts if the product purchased in one country is sent for repair elsewhere.

If the product is defective, contact your nearest Fluke authorized service center to obtain return authorization information, then send the product to that service center, with a description of the difficulty, postage and insurance prepaid (FOB Destination). Fluke assumes no risk for damage in transit. Fluke will pay return transportation for product repaired or replaced in-warranty. Before making any non-warranty repair, Fluke will estimate cost and obtain authorization, then invoice you for repair and return transportation.

THIS WARRANTY IS YOUR ONLY REMEDY. NO OTHER WARRANTIES, SUCH AS FITNESS FOR A PARTICULAR PURPOSE, ARE EXPRESSED OR IMPLIED. FLUKE SHALL NOT BE LIABLE FOR ANY SPECIAL, INDIRECT, INCIDENTAL OR CONSEQUENTIAL DAMAGES OR LOSSES, INCLUDING LOSS OF DATA, ARISING FROM ANY CAUSE OR THEORY. AUTHORIZED RESELLERS ARE NOT AUTHORIZED TO EXTEND ANY DIFFERENT WARRANTY ON FLUKE’S BEHALF. Since some states do not allow the exclusion or limitation of an implied warranty or of incidental or consequential damages, this limitation of liability may not apply to you. If any provision of this warranty is held invalid or unenforceable by a court or other decision-maker of competent jurisdiction, such holding will not affect the validity or enforceability of any other provision.

2/02

Table of Contents

Title	Page
Introduction	1
Contacting Fluke	1
Safety Information	1
The Meter's Features	5
Power-Up Options	13
Automatic Power-Off	13
Input Alert™ Feature	13
Making Measurements	14
Measuring AC and DC Voltage	14
Measuring Temperature	15
Testing for Continuity	16
Measuring Resistance	18
Using Conductance for High Resistance or Leakage Tests	20
Measuring Capacitance	21
Testing Diodes	22
Measuring DC or AC Current	24
Measuring Frequency	27

Measuring Duty Cycle 29
Measuring Pulse Width 30
Bar Graph 30
Zoom Mode (Power Up Option Only) 30
Uses for the Zoom Mode 30
HiRes Mode 31
MIN MAX Recording Mode 31
Smooth Feature (Power Up Option Only) 32
AutoHOLD Mode 34
Relative Mode 34
Using the Meter for Automotive Applications 34
Measuring RPM 35
Testing MAP or BP/MAP Sensors with Frequency Output 38
Measuring Internal Resistance of an Ignition Coil 40
Measuring Pulse Width on a Port Fuel Injector 42
Testing Ripple Voltage on an Alternator 44
Measuring Voltages on a Typical Oxygen Sensor 46
Measuring Starter Circuit Voltage Drop 48
Testing the Throttle Position Sensor Voltage 50
Testing the Throttle Position Sensor Resistance 50
Isolating a Circuit Causing a Current Drain 52
Measuring System Voltage 54
Testing for Continuity in a Switch 56
Maintenance 58
General Maintenance 58
Testing the Fuse 58
Replacing the Battery 59
Replacing the Fuses 60

Service and Parts 60
Specifications 66
General Specifications 66
Detailed Specifications 67

List of Tables

Table	Title	Page
1.	Electrical Symbols	4
2.	88 V Automotive Multimeter Front Controls	5
3.	Input Terminals	6
4.	Rotary Switch Positions	7
5.	Pushbuttons	8
6.	Display Features	11
7.	Functions and Trigger Levels for Frequency Measurements	28
8.	MIN MAX Functions	33
9.	Battery Charge Voltages	54
10.	Replacement Parts	62
11.	Accessories	65
12.	AC Voltage Function Specifications	67
13.	DC Voltage, Resistance, and Conductance Function Specifications	68
14.	Temperature Specifications	68
15.	Current Function Specifications	69
16.	Capacitance and Diode Function Specifications	70
17.	Frequency Counter Specifications	71

18. Frequency Counter Sensitivity and Trigger Levels 72
19. Electrical Characteristics of the Terminals 73
20. Min Max Recording Specifications 74

List of Figures

Figure	Title	Page
1.	88 V Automotive Multimeter Front	5
2.	Measuring AC and DC Voltage	14
3.	Testing for Continuity	17
4.	Measuring Resistance	19
5.	Measuring Capacitance	21
6.	Testing a Diode	23
7.	Measuring Current	26
8.	Components of Duty Cycle Measurements	29
9.	Measuring RPM with Inductive Pickup	37
10.	Testing MAP or BP/MAP Sensors with Frequency Output	39
11.	Measuring Internal Resistance on an Ignition Coil	41
12.	Measuring Pulse Width on a Port Fuel Injector	43
13.	Testing Ripple Voltage on an Alternator	45
14.	Measuring Voltages on a Typical Oxygen Sensor	47
15.	Measuring Starter Circuit Voltage Drop	49
16.	Testing the Throttle Position Sensor Resistance	51
17.	Isolating Circuit Causing Current Drain	53

18. Measuring the No-Load Voltage of a Battery 55
19. Testing for Continuity in a Switch 57
20. Testing the Current Fuses 59
21. Battery and Fuse Replacement 61
22. Replaceable Parts 64

Introduction

⚠⚠Warning

Read "Safety Information" before you use the Meter.

The Model 88 V Automotive Multimeter (“the Meter”) is a hand-held, battery-operated measurement device used for voltage, continuity, resistance, current, diode, capacitance, frequency, temperature, RPM, pulse width, and duty cycle measurements.

Safety Information

The Meter complies with:

- EN61010-1:2001
- ANSI/ISA S82.01-2004
- CAN/CSA C22.2 No. 1010.1:2004
- UL61010-1
- Measurement Category III, 1000 V, Pollution Degree 2
- Measurement Category IV, 600 V, Pollution Degree 2

In this manual, a **Warning** identifies conditions and actions that pose hazards to the user. A **Caution** identifies conditions and actions that may damage the Meter or the equipment under test.

Electrical symbols used on the Meter and in this manual are explained in Table 1.

⚠⚠Warning

To avoid possible electric shock or personal injury, follow these guidelines:

- **Use this Meter only as specified in this manual or the protection provided by the Meter might be impaired.**
- **Do not use the Meter if it is damaged. Before you use the Meter, inspect the case. Look for cracks or missing plastic. Pay particular attention to the insulation surrounding the connectors.**
- **Make sure the battery door is closed and latched before operating the Meter.**
- **Replace the battery as soon as the battery indicator (▬) appears.**
- **Remove test leads from the Meter before opening the battery door.**
- **Inspect the test leads for damaged insulation or exposed metal. Check the test leads for continuity. Replace damaged test leads before you use the Meter.**
- **Do not apply more than the rated voltage, as marked on the Meter, between the terminals or between any terminal and earth ground.**
- **Never operate the Meter with the cover removed or the case open.**
- **Use caution when working with voltages above 30 V ac, 42 V ac peak, or 60 V dc. These voltages pose a shock hazard.**
- **Use only the replacement fuses specified by the manual.**
- **Use the proper terminals, function, and range for measurements.**
- **Avoid working alone.**
- **When measuring current, turn off circuit power before connecting the Meter in the circuit. Remember to place the Meter in series with the circuit.**
- **When making electrical connections, connect the common test lead before connecting the live test lead; when disconnecting, disconnect the live test lead before disconnecting the common test lead.**
- **Do not use the Meter if it operates abnormally. Protection may be impaired. When in doubt, have the Meter serviced.**

- **Do not operate the Meter around explosive gas, vapor, or dust.**
- **Use only a single 9 V battery, properly installed in the Meter case, to power the Meter.**
- **When servicing the Meter, use only specified replacement parts.**
- **When using probes, keep fingers behind the finger guards on the probes.**

⚠⚠Caution

To avoid possible damage to the Meter or to the equipment under test, follow these guidelines:

- **Disconnect circuit power and discharge all high-voltage capacitors before testing resistance, continuity, diodes, or capacitance.**
- **Use the proper terminals, function, and range for all measurements.**
- **Before measuring current, check the Meter's fuses. (See "Testing the Fuse").**

Table 1. Electrical Symbols

~	AC (Alternating Current)	⏚	Earth ground
⎓	DC (Direct Current)	⊟	Fuse
⚠	Hazardous voltage	CE	Conforms to European Union directives.
⚠	Risk of Danger. Important information. See Manual.	CSA	Conforms to relevant Canadian Standards Association directives.
▬	Battery. Low battery when displayed.	⧈	Double insulated
)))	Continuity test or continuity beeper tone.	⊣⊢	Capacitance
CAT III	IEC Overvoltage Category III CAT III equipment is designed to protect against transients in equipment in fixed-equipment installations, such as distribution panels, feeders and short branch circuits, and lighting systems in large buildings.	CAT IV	IEC Overvoltage Category IV CAT IV equipment is designed to protect against transients from the primary supply level, such as an electricity meter or an overhead or underground utility service.
UL	Underwriters Laboratories	⊳⊢	Diode
TÜV GS	Inspected and licensed by TÜV Product Services.		

The Meter's Features

Tables 2 through 6 briefly describe the Meter's features.

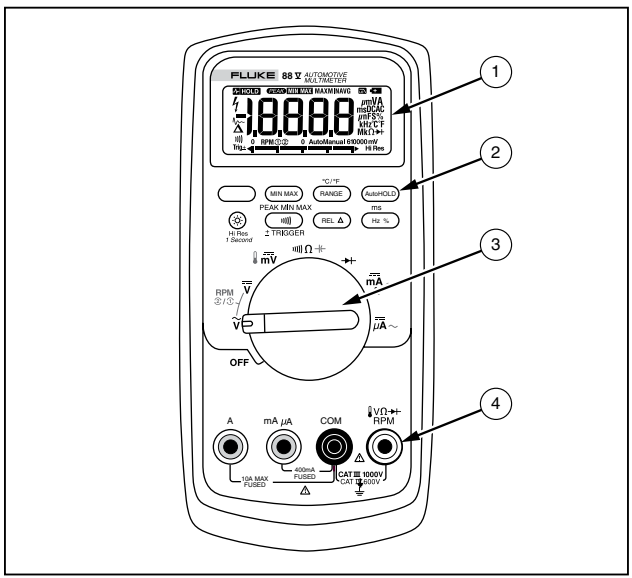

ayg40f.eps

Figure 1. 88 V Automotive Multimeter Front

Table 2. 88 V Automotive Multimeter Front Controls

Number	Description
1	Display
2	Pushbuttons
3	Rotary Switch
4	Input Terminals

Table 3. Input Terminals

Terminal	Description
A	Input for 0 A to 10.00 A current measurements (20 A overload for 30 seconds maximum), current frequency, duty cycle, and pulse width measurements.
mA µA	Input for 0 µA to 400 mA current measurements (600 mA for 18 hrs.), current frequency, duty cycle, and pulse width.
COM	Return terminal for all measurements.
🌡 V Ω →⊢ RPM	Input for voltage, continuity, resistance, diode, capacitance, frequency, temperature, duty cycle, pulse width, and RPM measurements.

Table 4. Rotary Switch Positions

Switch Position	Function
Any Position	When the Meter is turned on, the Meter model number briefly appears on the display.
Ṽ	AC voltage measurement
V̄	DC voltage measurement Press ( ) for RPM ②, press again for RPM ①.
🌡 mV̄	600 mV dc voltage range Press ( ) for temperature (🌡).
))))) Ω ⊣⊢	Press ( ) for continuity test. Ω Resistance measurement Press ( ) for capacitance measurement.
⊣▶⊢	Diode test
mA̅ A̅ ~	DC current measurements from 0 mA to 10.00 A Press ( ) for ac current measurements, from 0 mA to 10.00 A.
μA̅ ~	DC current measurements from 0 μA to 6000 μA Press ( ) for ac current measurements from 0 μA to 6000 μA.

Table 5. Pushbuttons

Button	Switch Position	Function
(Yellow)	Ω ⊣⊢	Selects capacitance
	mV	Selects temperature
	RPM ② / ① Ṽ V	Selects measurement of RPM ② or RPM ①
	mA A ~	Switches between dc and ac current
	μA ~	Switches between dc and ac current
	Power-up	Disables automatic power-off feature (Meter normally powers off in 30 minutes). The Meter reads "PoFF" until (Yellow) is released.
MIN MAX	Any switch position	Starts recording of minimum and maximum values and disables power-off feature. Steps the display through MAX, MIN, AVG (average), and present readings. Cancels MIN MAX (hold for 1 second).
	Power-up	Enables the Meter's calibration mode and prompts for a password. The Meter reads "CAL" and enters calibration mode. See *the 80 Series V Callibration Manual* for more information.

Table 5. Pushbuttons (cont.)

Button	Switch Position	Function
RANGE	Any switch position	Switches between the ranges available for the selected function. To return to autoranging, hold the button down for 1 second.
	🌡 mV	Switches between °C and °F when temperature is selected.
	Power-up	Enables the Meter's smoothing feature. The Meter reads "S---" until RANGE is released.
AutoHOLD	Any switch position	AutoHOLD captures the present reading on the display. When a new, stable reading is detected, the Meter beeps and displays the new reading.
	MIN MAX recording	Stops and starts recording without erasing recorded values.
	Frequency counter	Stops and starts the frequency counter.
	Power-up	Turns on all LCD segments until AutoHOLD, is released.
☼	Any switch position	Turns the backlight on, makes it brighter, and turns it off.
		Hold ☼ down for one second to enter the HiRes digit mode. The "HiRes" icon appears on the display. To return to the 3-1/2 digit mode, hold ☼ down for one second. HiRes=19,999
	Power-up	Changes the default ranging from manual to auto for the V ac and V dc functions.
		The Meter reads "Auto" until ☼ is released.

Table 5. Pushbuttons (cont.)

Button	Switch Position	Function
)))))	Continuity))))Ω⊣⊢	Turns the continuity beeper on and off
	MIN MAX recording	Switches between Peak (250 µs) and Normal (100 ms) response times.
	Hz, Duty Cycle	Toggles the meter to trigger on positive or negative slope.
	Power-up	Disables the beeper for all functions. The Meter reads "bEEP" until))))) is released.
REL Δ (Relative mode)	Any switch position	Stores the present reading as a reference for subsequent readings. The display is zeroed, and the stored reading is subtracted from all subsequent readings.
	Power-up	Enables zoom mode for the bar graph. The Meter reads "2rEL" until REL Δ is released.
Hz %	Any switch position except diode test	Press Hz % for frequency measurements. Starts the frequency counter. Press again to enter duty cycle mode, and again to measure pulse width (ms).
	Power-up	Enables the Meter's high impedance mode when the mV dc function is used. The Meter reads "Hi 2" until Hz % is released.

Table 6. Display Features

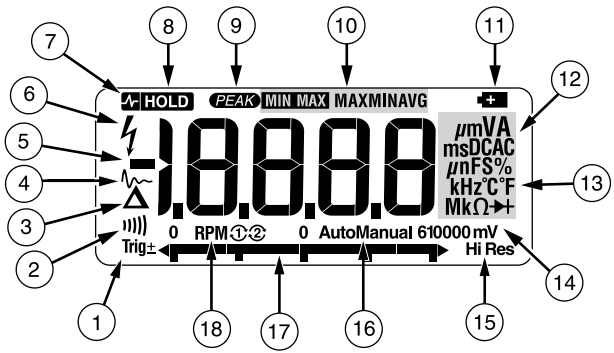

ayg04f.eps

Number	Feature	Indication
1	±	Polarity indicator for the analog bar graph.
	Trig±	Positive or negative slope indicator for Hz/duty cycle triggering, pulse width, RPM.
2	)))))	The continuity beeper is on.
3	Δ	Relative (REL) mode is active.
4	∿	Smoothing is active.
5	–	Indicates negative readings. In relative mode, this sign indicates that the present input is less than the stored reference.
6	ϟ	Indicates the presence of a high voltage input. Appears if the input voltage is 30 V or greater (ac or dc). Also appears in cal, Hz, and duty cycle modes.
7	∿ HOLD	AutoHOLD is active.
8	HOLD	Display Hold is active.
9	PEAK	Indicates the Meter is in Peak Min Max mode and the response time is 250 µs.
10	MIN MAX MAX MIN AVG	Indicators for minimum-maximum recording mode.
11	▬+	The battery is low. ⚠⚠Warning: To avoid false readings, which could lead to possible electric shock or personal injury, replace the battery as soon as the battery indicator appears.

Number	Feature	Indication
⑫	**A, µA, mA**	Amperes (amps), Microamp, Milliamp
	V, mV	Volts, Millivolts
	µF, nF	Microfarad, Nanofarad
	nS	Nanosiemens
	%	Percent. Used for duty cycle measurements.
	ms	Milliseconds. Used for pulse width measurement.
	Ω, MΩ, kΩ	Ohm, Megohm, Kilohm
	Hz, kHz	Hertz, Kilohertz
	AC DC	Alternating current, direct current
⑬	**°C, °F**	Degrees Celsius, Degrees Fahrenheit
⑭	**610000 mV**	Displays selected range
⑮	**HiRes**	The Meter is in high resolution (Hi Res) mode. HiRes=19,999

Number	Feature	Indication
⑯	**Auto**	The Meter is in autorange mode and automatically selects the range with the best resolution.
	Manual	The Meter is in manual range mode.
⑰	0 0	The number of segments is relative to the full-scale value of the selected range. In normal operation 0 (zero) is on the left. The polarity indicator at the left of the graph indicates the polarity of the input. The graph does not operate with the capacitance, frequency counter functions, temperature, or peak min max. For more information, see “Bar Graph” later in this manual. The bar graph also has a zoom function, as described under "Zoom Mode".
⑱	**RPM②①**	② conventional (4 cycle) Counts every other revolution. ① waste spark or 2 cycle. Counts every revolution.

Number	Feature	Indication
--	OL	Overload condition is detected.
Messages		
bAtt	Replace the battery immediately.	
d,SC	In the capacitance function, too much electrical charge is present on the capacitor being tested.	
EEPr Err	Invalid EEPROM data. Have Meter serviced.	
CAL Err	Invalid calibration data. Calibrate Meter.	
LEAd	⚠Test lead alert. Displayed when the test leads are in the **A** or **mA**/**µA** terminal and the selected rotary switch position does not correspond to the terminal being used.	
FB-Err	Invalid model. Have Meter serviced.	
OPEn	Open thermocouple is detected.	

Power-Up Options

Holding a button down while turning the Meter on activates a power-up option. Table 5 includes the power-up options.

Automatic Power-Off

The Meter automatically turns off if you do not turn the rotary switch or press a button for 30 minutes. If MIN MAX Recording is enabled, the Meter will not power off. To disable automatic power-off, refer to Table 4.

Input Alert™ Feature

If a test lead is plugged into the **mA/µA** or **A** terminal, but the rotary switch is not set to the correct current position, the beeper warns you by making a chirping sound and the display flashes "LEAd". This warning is intended to stop you from attempting to measure voltage, continuity, resistance, capacitance, or diode values when the leads are plugged into a current terminal.

⚠⚠ Caution

Placing the probes across (in parallel with) a powered circuit when a lead is plugged into a current terminal can damage the circuit you are testing and blow the Meter's fuse. This can happen because the resistance through the Meter's current terminals is very low, so the Meter acts like a short circuit.

Making Measurements

The following sections describe how to take measurements with the Meter.

Measuring AC and DC Voltage

The Meter's voltage ranges are 600.0 mV, 6.000 V, 60.00 V, 600.0 V, and 1000 V. To select the 600.0 mV dc range, turn the rotary switch to mV. To measure ac or dc voltage, refer to Figure 2.

When measuring voltage, the Meter acts approximately like a 10 MΩ (10,000,000 Ω) impedance in parallel with the circuit. This loading effect can cause measurement errors in high-impedance circuits. In most cases, the error is negligible (0.1% or less) if the circuit impedance is 10 kΩ (10,000 Ω) or less.

For better accuracy when measuring the dc offset of an ac voltage, measure the ac voltage first. Note the ac voltage range, then manually select a dc voltage range equal to or higher than the ac range. This procedure improves the accuracy of the dc measurement by ensuring that the input protection circuits are not activated.

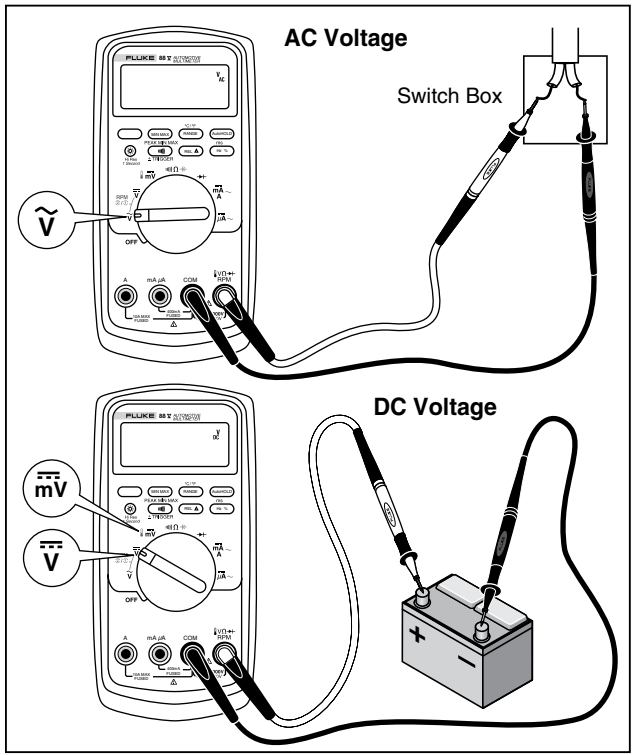

aug01f.eps

Figure 2. Measuring AC and DC Voltage

Measuring Temperature

The Meter measures the temperature of a type-K thermocouple (included). Choose between degrees Celsius (°C) or degrees Fahrenheit (°F) by pushing RANGE.

⚠⚠ Caution

To avoid possible damage to the Meter or other equipment, remember that while the Meter is rated for -200.0 °C to +1090.0 °C and -328.0 °F to 1994.0 °F, the included K-Type Thermocouple is rated to 260 °C. For temperatures out of that range, use a higher rated thermocouple.

Display ranges are -200.0 °C to +1090.0 °C and -328.0 °F to 1994.0 °F. Readings outside of these ranges show **OL** on the Meter display. When there is no thermocouple connected, the display shows **OPEn** for Meters above serial number (90710501) and **OL** for meters below serial number (90710501).

Note

To locate the serial number remove the Meter from the holster. The serial number is on the back of the holster.

To measure temperature, do the following:

1. Connect a type-K thermocouple to the Meter's **COM** and VΩ→+ RPM terminals.
2. Turn the rotary switch to **mV**.
3. Press ( ) to enter temperature mode.
4. Push RANGE to choose Celsius or Fahrenheit.

Testing for Continuity

⚠⚠Caution

To avoid possible damage to the Meter or to the equipment under test, disconnect circuit power and discharge all high-voltage capacitors before testing for continuity.

The continuity test features a beeper that sounds as long as a circuit is complete. The beeper allows you to perform quick continuity tests without having to watch the display.

To test for continuity, set up the Meter as shown in Figure 3 .

Press (•))) to turn the continuity beeper on or off.

The continuity function detects intermittent opens and shorts lasting as little as 1ms. A brief short causes the Meter to emit a short beep.

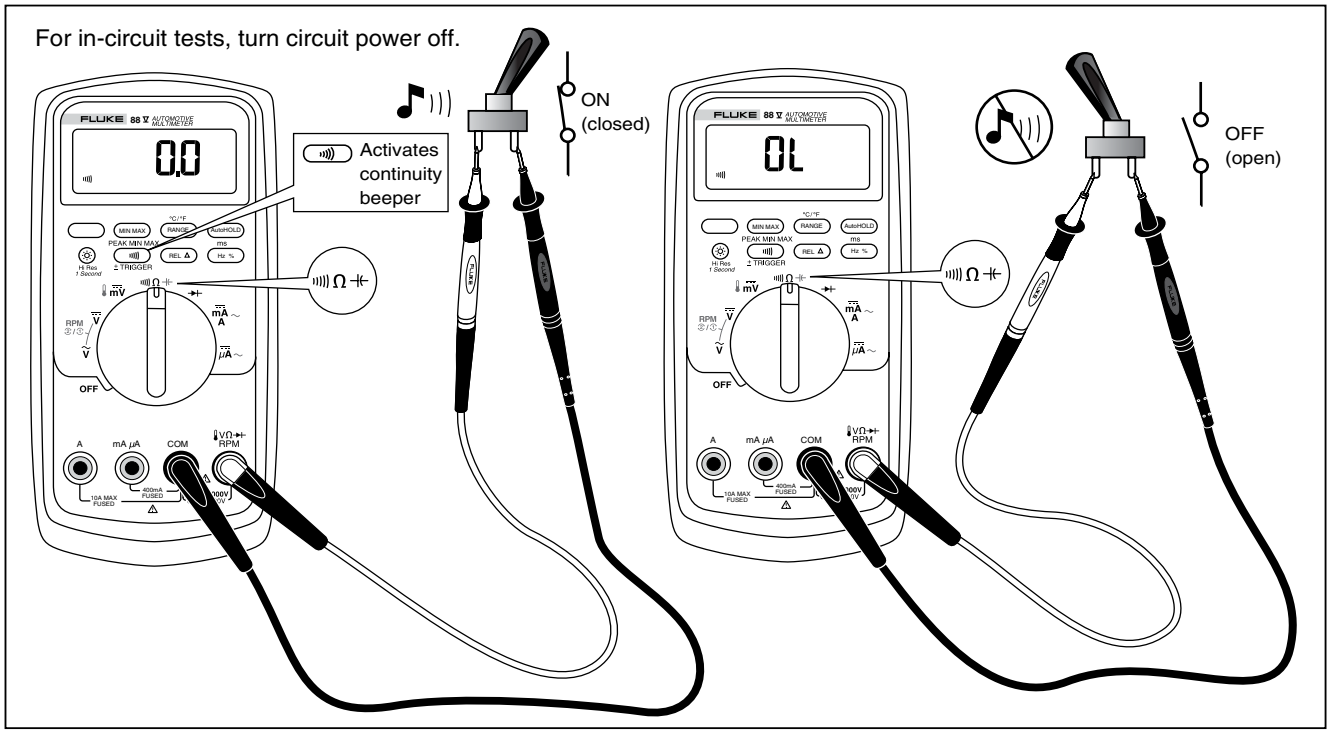

ayg03.eps

Figure 3. Testing for Continuity

Measuring Resistance

⚠⚠Caution

- **To avoid possible damage to the Meter or to the equipment under test, disconnect circuit power and discharge all high-voltage capacitors before measuring resistance.**
- **Follow the manufacturers test procedures when testing air bags. See Table 19 for current levels.**

The Meter measures resistance by sending a small current through the circuit. Because this current flows through all possible paths between the probes, the resistance reading represents the total resistance of all paths between the probes.

The Meter's resistance ranges are 600.0 Ω, 6.000 kΩ, 60.00 kΩ, 600.0 kΩ, 6.000 MΩ, and 50.00 MΩ.

To measure resistance, set up the Meter as shown in Figure 4.

The following are some tips for measuring resistance:

- The measured value of a resistor in a circuit is often different from the resistor's rated value.
- The test leads can add 0.1 Ω to 0.2 Ω of error to resistance measurements. To test the leads, touch the probe tips together and read the resistance of the leads. If necessary, you can use the relative (REL) mode to automatically subtract this value.
- The resistance function can produce enough voltage to forward-bias silicon diode or transistor junctions, causing them to conduct. If this is suspected, press (RANGE) to apply a lower current in the next higher range. If the value is higher, use the higher value. Refer to Table 19.
- For low ohms tests, use 600 Ω and press (☼) for 1 second to enter Hi-Res mode. The display will show 0.01 Ω resolution up to 199.99 Ω.

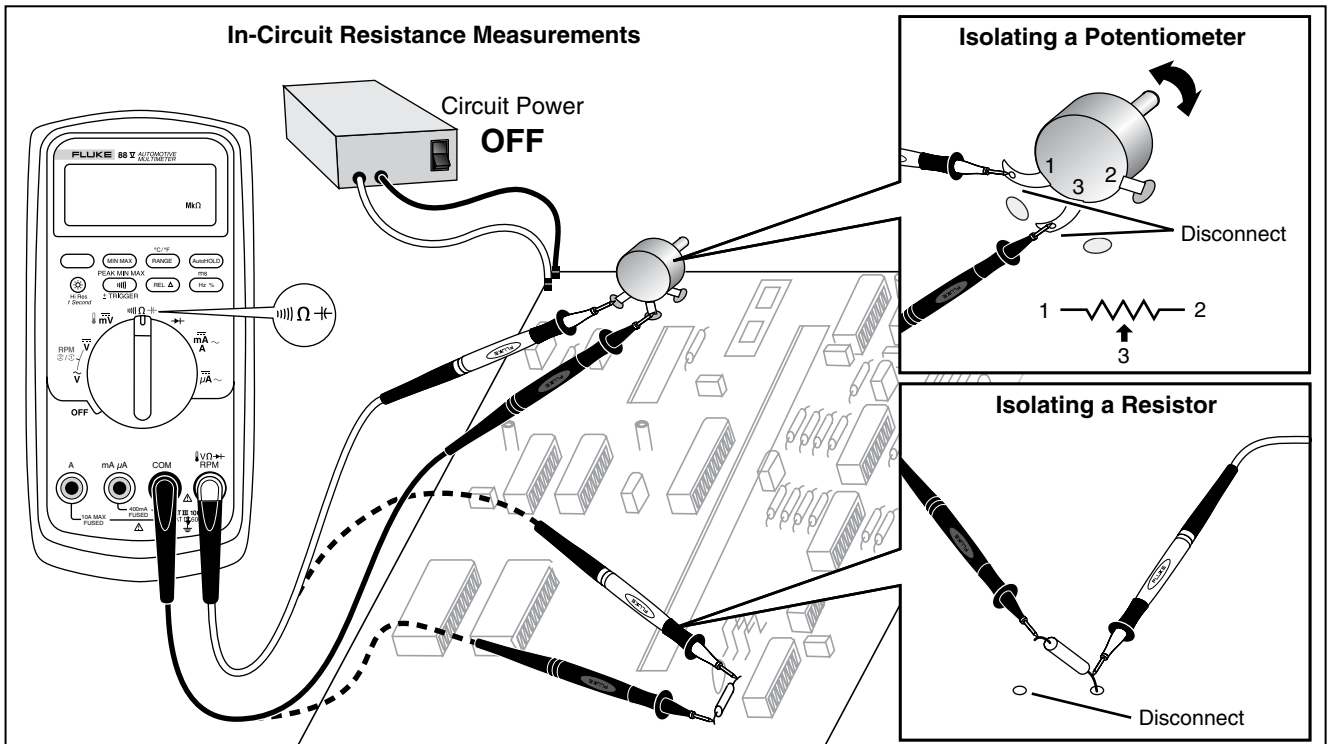

aug06f.eps

Figure 4. Measuring Resistance

Using Conductance for High Resistance or Leakage Tests

Conductance, the inverse of resistance, is the ability of a circuit to pass current.

The Meter's 60 nS range measures conductance in nanosiemens (1 nS = 0.000000001 Siemens). Because such small amounts of conductance correspond to extremely high resistance, the nS range lets you determine the resistance of components up to 100,000 MΩ, 1/1 nS = 1,000 MΩ. This test might be used to test DIS coil packs on a car.

To measure conductance, set up the Meter as shown for measuring resistance (Figure 4); then press RANGE until the nS indicator appears on the display.

The following are some tips for measuring conductance:

- High-resistance readings are susceptible to electrical noise. To smooth out most noisy readings, enter the MIN MAX recording mode; then step to the average (AVG) reading.
- There is normally a residual conductance reading with the test leads open. To ensure accurate readings, use the relative (REL) mode to subtract the residual value.

Measuring Capacitance

⚠⚠Caution

To avoid possible damage to the Meter or to the equipment under test, disconnect circuit power and discharge all high-voltage capacitors before measuring capacitance. Use the dc voltage function to confirm that the capacitor is discharged.

The Meter's capacitance ranges are 10.00 nF, 100.0 nF, 1.000 µF, 10.00 µF, 100.0 µF, and 9999 µF.

To measure capacitance, set up the Meter as shown in Figure 5.

To improve the accuracy of measurements less than 1000 nF, use the relative (REL) mode to subtract the residual capacitance of the Meter and leads.

Note

If too much electrical charge is present on the capacitor being tested, the display shows "**diSC**".

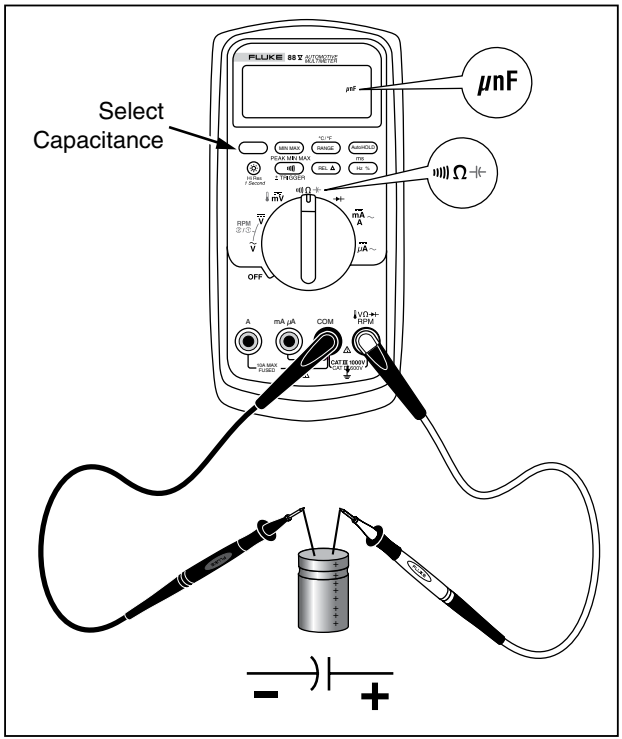

ayg02f.eps

Figure 5. Measuring Capacitance

Testing Diodes

⚠⚠Caution

To avoid possible damage to the Meter or to the equipment under test, disconnect circuit power and discharge all high-voltage capacitors before testing diodes.

Use the diode test to check diodes, transistors, silicon controlled rectifiers (SCRs), and other semiconductor devices. This function tests a semiconductor junction by sending a current through the junction, then measuring the junction's voltage drop. A good silicon junction drops between 0.5 V and 0.8 V.

To test a diode out of a circuit, set up the Meter as shown in Figure 6. For forward-bias readings on any semiconductor component, place the red test lead on the component's positive terminal and place the black lead on the component's negative terminal.

In a circuit, a good diode should still produce a forward-bias reading of 0.5 V to 0.8 V; however, the reverse-bias reading can vary depending on the resistance of other pathways between the probe tips.

A short beep sounds if the diode is good (<0.85 V). A continuous beep sounds if the reading is ≤0.100 V. This reading would indicate a short circuit. The display shows “OL” if the diode is open.

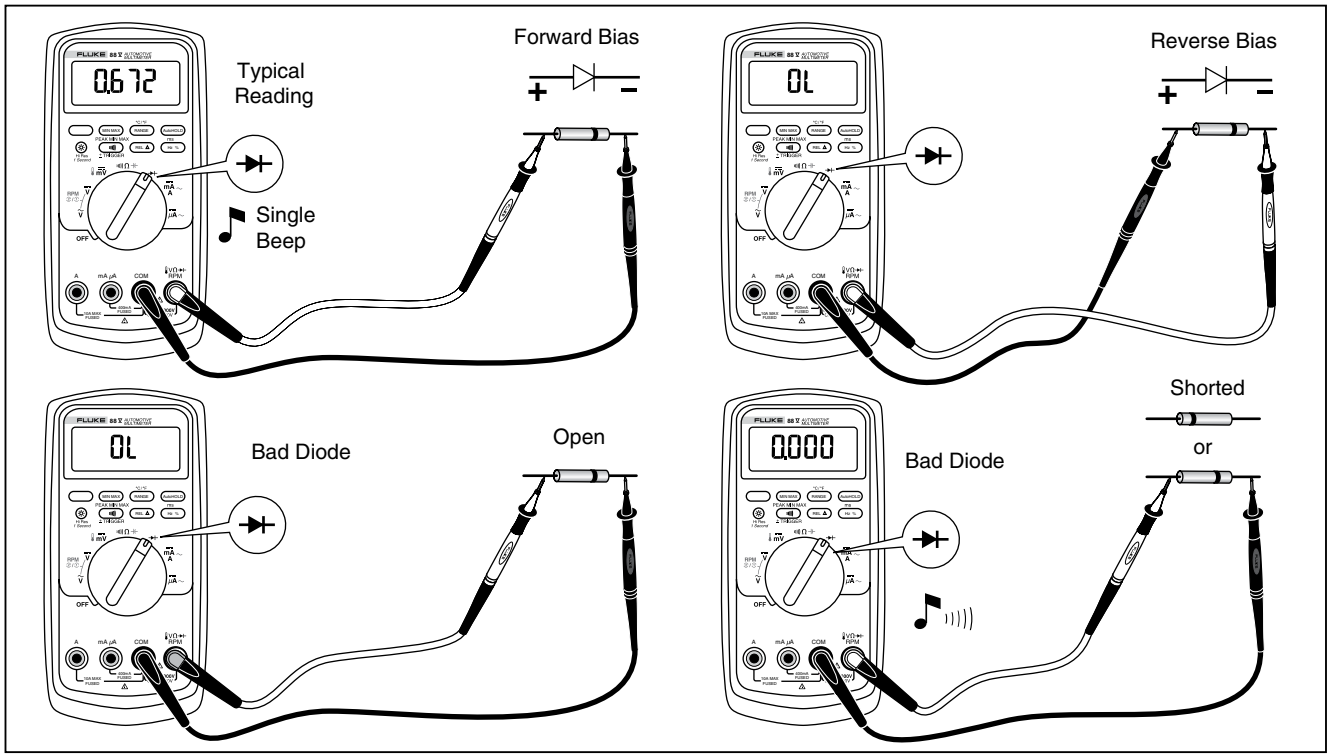

ayg09f.eps

Figure 6. Testing a Diode

Measuring DC or AC Current

⚠⚠Warning

To avoid possible electric shock or personal injury, never attempt an in-circuit current measurement where the open-circuit potential to earth is greater than 1000 V. You may damage the Meter or be injured if the fuse blows during such a measurement.

⚠⚠Caution

To avoid possible damage to the Meter or to the equipment under test:

- **Check the Meter's fuses before measuring current. See Testing the Fuse later in this manual.**
- **Use the proper terminals, function, and range for all measurements.**
- **Never place the probes across (in parallel with) any circuit or component when the leads are plugged into the current terminals.**

To measure current, you must break the circuit under test, then place the Meter in series with the circuit.

The Meter's current ranges are 600.0 µA, 6000 µA, 60.00 mA, 400.0 mA, 6000 mA, and 10 A.

To measure current, refer to Figure 7 and proceed as follows:

1. Turn off power to the circuit. Discharge all high-voltage capacitors.
2. Insert the black lead into the **COM** terminal. For currents between 6 mA and 400 mA, insert the red lead into the **mA/µA** terminal. For currents above 400 mA, insert the red lead into the **A** terminal.

   Note

   *To avoid blowing the Meter's 400 mA fuse, use the **mA/µA** terminal only if you are sure the current is less than 400 mA continuously or less than 600 mA for 18 hours or less.*
3. If you are using the **A** terminal, set the rotary switch to mA/A. If you are using the **mA/µA** terminal, set the rotary switch to µA for currents below 6000 µA (6 mA), or mA/A for currents above 6000 µA.
4. To measure ac current, press ( ).

5. Break the circuit path to be tested. Touch the black probe to the more negative side of the break; touch the red probe to the more positive side of the break. Reversing the leads will produce a negative reading, but will not damage the Meter.

6. Turn on power to the circuit; then read the display. Be sure to note the unit given at the right side of the display (µA, mA, or A).

7. Turn off power to the circuit and discharge all high-voltage capacitors. Remove the Meter and restore the circuit to normal operation.

The following are some tips for measuring current:

- If the current reading is 0 and you are sure the Meter is set up correctly, test the Meter's fuses as described under "Testing the Fuses".

- A small voltage drop across a current meter input may effect operation of the measured circuit. You can calculate this burden voltage using the values listed in the specifications in Table 15.

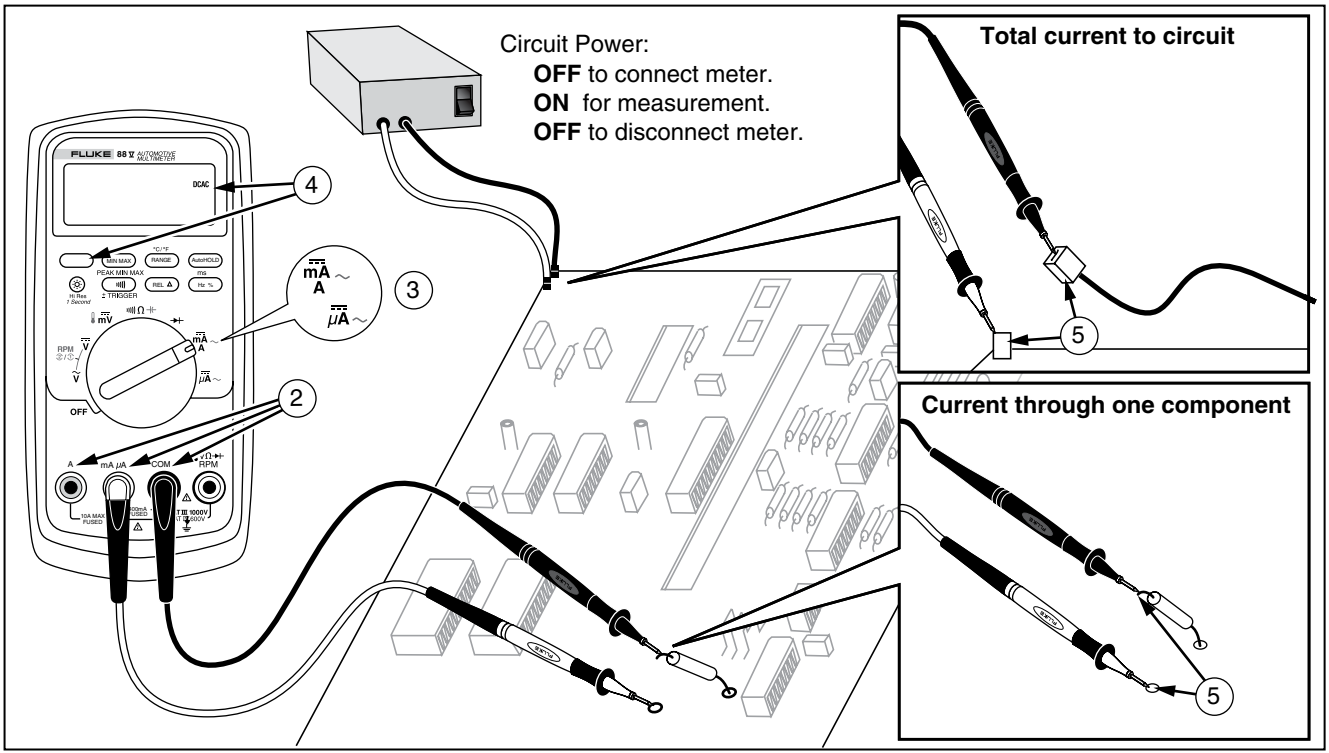

Figure 7. Measuring Current

Measuring Frequency

The Meter measures the frequency of a voltage or current signal by counting the number of times the signal crosses a threshold level each second.

Table 7 summarizes the trigger levels and applications for measuring frequency using the various ranges of the Meter's voltage and current functions.

To measure frequency, connect the Meter to the signal source; then press (Hz %). Pressing (•))) switches the trigger slope between + and -, as indicated by the symbol at the left side of the display (refer to Figure 8 under "Measuring Duty Cycle"). Pressing (AutoHOLD) stops and starts the counter.

The Meter autoranges to one of five frequency ranges: 199.99 Hz, 1999.9 Hz, 19.999 kHz, 199.99 kHz, and greater than 200 kHz. For frequencies below 10 Hz, the display is updated at the frequency of the input.
Below 0.5 Hz, the display may be unstable.

The following are some tips for measuring frequency:

- If a reading shows as 0 Hz or is unstable, the input signal may be below or near the trigger level. You can usually correct these problems by selecting a lower range, which increases the sensitivity of the Meter. In the $\overline{\overline{V}}$ function, the lower ranges also have lower trigger levels.
- If a reading seems to be a multiple of what you expect, the input signal may be distorted. Distortion can cause multiple triggering of the frequency counter. Selecting a higher voltage range might solve this problem by decreasing the sensitivity of the Meter. You can also try selecting a dc range, which raises the trigger level. In general, the lowest frequency displayed is the correct one.

Table 7. Functions and Trigger Levels for Frequency Measurements

Function	Range	Approximate Trigger Level	Typical Application
Ṽ	6 V, 60 V, 600 V, 1000 V	± 5 % of scale	Most signals.
Ṽ	600 mV	± 30 mV	High-frequency 5 V logic signals. (The dc-coupling of the V̅ function can attenuate high-frequency logic signals, reducing their amplitude enough to interfere with triggering.)
mV̅	600 mV	40 mV	Refer to the measurement tips given on page 27.
V̅	6 V	1.7 V	5 V logic signals (TTL).
V̅	60 V	4.0 V	Automotive switching signals.
V̅	600 V	40 V	Refer to the measurement tips given before on page 27.
V̅	1000 V	100 V	
))) Ω ⊣⊢ ⊳⊢ 🌡	Frequency counter characteristics are not available or specified for these functions.		
A~	All ranges	± 5 % of scale	AC current signals.
µA⎓	600 µA, 6000 µA	30 µA, 300 µA	Refer to the measurement tips given before this table.
mA⎓	60 mA, 400 mA	3.0 mA, 30 mA	
A⎓	6 A, 10 A	0.30 A, 3.0 A	

Measuring Duty Cycle

Duty cycle (or duty factor) is the percentage of time a signal is above or below a trigger level during one cycle (Figure 8). The duty cycle mode is optimized for measuring the on or off time of logic and switching signals. Systems such as electronic fuel injection systems and switching power supplies are controlled by pulses of varying width, which can be checked by measuring duty cycle.

To measure duty cycle, set up the Meter to measure frequency; then press (Hz %) a second time. As with the frequency function, you can change the slope for the Meter's counter by pressing (•))).

For 5 V logic signals, use the 6 V dc range. For 12 V switching signals in automobiles, use the 60 V dc range. For sine waves, use the lowest range that does not result in multiple triggering. (Normally, a distortion-free signal can be up to ten times the amplitude of the selected voltage range.)

If a duty cycle reading is unstable, press (MIN MAX); then scroll to the AVG (average) display.

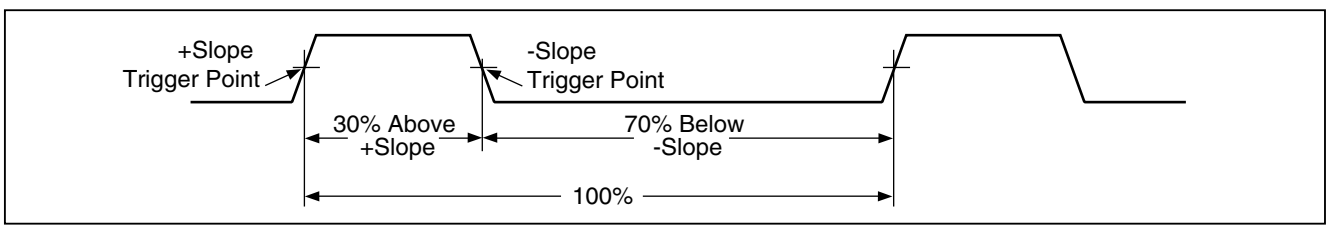

ayg39f.eps

Figure 8. Components of Duty Cycle Measurements

Measuring Pulse Width

For a periodic waveform (its pattern repeats at equal time intervals), you can determine the amount of time that the signal is high or low as follows:

1. Measure the signal's frequency by pressing (Hz %) once.
2. Press (Hz %) two more times to measure pulse width in milliseconds (ms)
3. Press (ıılı) to toggle between the signal's positive or negative pulse.

Bar Graph

The analog bar graph functions like the needle on an analog meter, but without the overshoot. The bar graph updates 40 times per second. Because the graph responds 10 times faster than the digital display, it is useful for observing momentary changes, for making peak and null adjustments and for observing rapidly changing inputs. The graph is not shown for capacitance, frequency counter functions, temperature, or peak min max.

The number of lit segments indicates the measured value and is relative to the full-scale value of the selected range.

In the 60 V range, for example, the major divisions on the scale represent 0, 15, 30, 45, and 60 V. An input of -30 V lights the negative sign and the segments up to the middle of the scale.

The bar graph also has a zoom function, as described under "Zoom Mode".

Zoom Mode (Power Up Option Only)

To use the Rel Zoom Bar Graph:

1. Hold down (REL Δ) while turning the Meter on. The display reads "rrEL".
2. Select the relative mode by pressing (REL Δ) again.
3. The center of the bar graph now represents zero and the sensitivity of the bar graph increases by a factor of 10. Measured values more negative than the stored reference activate segments to the left of center; values more positive activate segments to the right of center.

Uses for the Zoom Mode

The relative mode, combined with the increased sensitivity of the bar graph's zoom mode, helps you make fast and accurate zero and peak adjustments.

For zero adjustments, set the Meter to the desired function, short the test leads together, press (REL Δ); then connect the leads to the circuit under test. Adjust the circuit's variable component until the display reads zero. Only the center segment on the zoom bar graph is lit.

For peak adjustments, set the Meter to the desired function, connect the leads to the circuit under test; then press (REL Δ). The display reads zero. As you adjust for a positive or negative peak, the bar graph length increases to the right or left of zero. If an overange symbol lights (◀ or ▶), press (REL Δ) twice to set a new reference; then continue with the adjustment.

HiRes Mode

Pressing (☼) for one second causes the Meter to enter the high-resolution (HiRes), 4-1/2 digit mode. Readings are displayed at 10 times the normal resolution with a maximum display of 19,999 counts. The HiRes mode works in all modes except capacitance, frequency counter functions, temperature, and the 250 µs (peak) MIN MAX modes.

To return to the 3-1/2 digit mode, press (☼) again for one second.

MIN MAX Recording Mode

The MIN MAX mode records minimum and maximum input values. When the inputs go below the recorded minimum value or above the recorded maximum value, the Meter beeps and records the new value. This mode can be used to capture intermittent readings, record maximum readings while you are away or record readings while you are operating the equipment under test and cannot watch the Meter. MIN MAX mode can also calculate an average of all readings taken since the MIN MAX mode was activated. To use MIN MAX mode, refer to the functions in Table 8.

Response time is the length of time an input must stay at a new value to be recorded. A shorter response time captures shorter events, but with decreased accuracy. Changing the response time erases all recorded readings. Model 88 V has 100 millisecond, and 250 µs (peak) response times. The 250 µs response time is indicated by "PEAK" on the display.

The 100 millisecond response time is best for recording power supply surges, inrush currents, and finding intermittent failures.

The true average value (AVG) displayed in the 100 ms mode is the mathematical integral of all readings taken since the start of recording (overloads are discarded).

The average reading is useful for smoothing out unstable inputs, calculating power consumption, or estimating the percentage of time a circuit is active.

Note

Monitoring average while testing oxygen sensors displays fuel trim trends.

Min Max records the signal extremes lasting longer than 100 ms.

Peak records the signal extremes lasting longer than 250 µs.

Smooth Feature (Power Up Option Only)

When the input signal changes rapidly, “smoothing” provides a steadier reading on the display by averaging multiple samples.

To use the smooth feature:

1. Hold down (RANGE) while turning the Meter on. The display will read “S---” until (RANGE) is released.
2. The smooth icon (∿) will appear on the left side of the display to let you know that smoothing is active.

Table 8. MIN MAX Functions

Button	MIN MAX Function
MIN MAX	Enter MIN MAX recording mode. The Meter is locked in the range displayed before you entered MIN MAX mode. (Select the desired measurement function and range before entering MIN MAX.) The Meter beeps each time a new minimum or maximum value is recorded.
MIN MAX (while in MIN MAX mode)	Step through maximum (MAX), minimum (MIN), average (AVG) and present values.
))))) PEAK MIN MAX	Select 100 ms or 250 µs response time. (The 250 µs response time is indicated by PEAK on the display.) Stored values are erased. The present and AVG (average) values are not available when 250 µs is selected.
AutoHOLD	Stop recording without erasing stored values. Press again to resume recording.
MIN MAX (hold for 1 second)	Exit MIN MAX mode. Stored values are erased. The Meter stays in the selected range.

AutoHOLD Mode

⚠⚠Warning

To avoid possible electric shock or personal injury, do not use AutoHOLD mode to determine that circuits are without power. The AutoHOLD mode will not capture unstable or noisy readings.

The AutoHOLD mode captures the present reading on the display. When a new, stable reading is detected, the Meter beeps and displays the new reading. To enter or exit AutoHOLD mode, press (AutoHOLD).

Relative Mode

Selecting relative mode ((REL Δ)) causes the Meter to zero the display and store the present reading as the reference for subsequent measurements. The Meter is locked into the range selected when you pressed (REL Δ). Press (REL Δ) again to exit this mode.

In relative mode, the reading shown is always the difference between the present reading and the stored reference value. For example, connect to battery with engine off, press (REL Δ) and start the engine to see charging voltage.

Note

The bar graph continues to display the actual voltage.

Using the Meter for Automotive Applications

This section uses some typical automotive testing applications. This information is intended to assist you in learning how to use the Meter. Consult your service manual for test procedures specific to your car.

Measuring RPM

RPM can be measured in either the dc volts or ac volts function. In dc volts, the measurement is dc-coupled, while in the ac volts position, it is ac coupled. If RPM readings appear noisy, you should use the function setting that provides the most stable reading.

Two RPM functions are available:

- RPM ② is used for conventional 4-cycle engines.
- RPM ① is used for 2-cycle engines or waste spark DIS 4-cycle engines (1 count/revolution).

When RPM is first selected, the Meter is in the 6 V dc range. (The range is indicated by the number shown at the right end of the analog bar graph.) If the reading is unstable, move to the 60 V range by pressing RANGE once.

The Meter comes with an inductive pickup. The inductive pickup takes the magnetic field generated by the current in the spark plug wire and converts it to a pulse that triggers the Meter's RPM measurement. The Meter can also read RPM directly from appropriate signals (like the camshaft position sensor or tach signals) using test leads rather than the inductive pickup.

- If the meter reading is too high or is unstable, move to the next V range by pressing RANGE once.
- On some systems with non-resistor plugs, the pickup may need to be moved away from plug or use the AC function.
- On DIS waste spark systems, the pickup may need to be reversed, depending on what side of the coil the plug is on.

Note

When RPM measurements are displayed, the last digit on the display might not settle. If you want a more stable display, use the Smooth function. In Smooth mode, multiple measurements are averaged before a value is displayed. Refer to the Smooth Feature earlier in this manual.

⚠⚠Warning

To avoid personal injury, make sure that the engine is off before connecting or removing the pickup. The ignition system can create a potential shock hazard.

1. Turn engine off.
2. Connect output plug of Inductive Pickup in the input terminals shown. Make sure the (-) plug is in COM and the (+) is in RPM. See Figure 9.

3. Turn rotary switch to $\tilde{V}$ or $\overline{\tilde{V}}$.

4. For 4-cycle engines that fire once every other revolution, press once to select RPM②. For systems that fire every revolution (2-cycle engines), and for DIS waste spark systems, press twice to select RPM①.

5. Clamp the Inductive Pickup to a plug wire near the spark plug. (Make sure that the jaws are closed completely and the side labeled SPARK PLUG SIDE faces the spark plug).

6. Turn engine on. Read RPM on the display. Turn the engine off before removing Pickup.

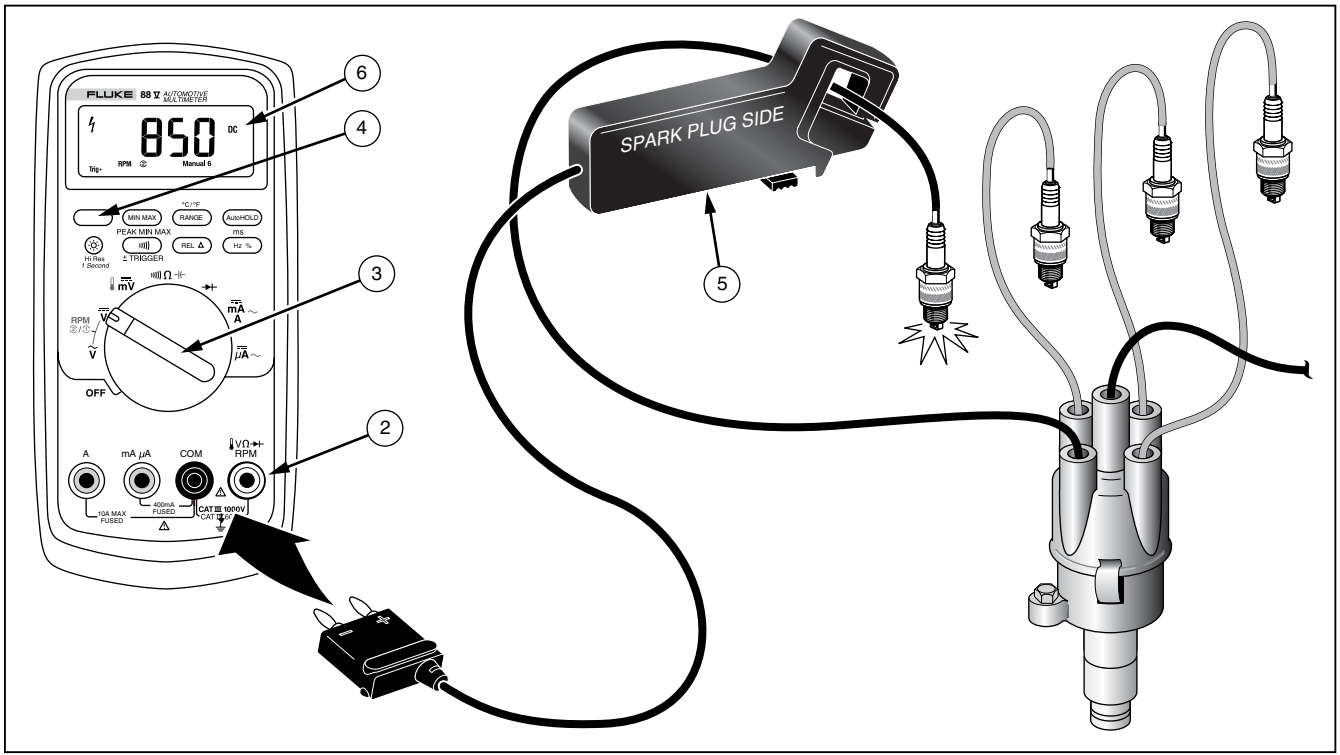

ayg21f.eps

Figure 9. Measuring RPM with Inductive Pickup

Testing MAP or BP/MAP Sensors with Frequency Output

To use the Frequency function to check barometric pressure/ manifold absolute pressure (BP/MAP) sensors:

1. Insert the test leads in the input terminals as shown in Figure 10.
2. Set the rotary switch to $\overline{\overline{\mathbf{V}}}$.
3. Connect the test lead clips to the circuit according to the manufacturer's wiring diagrams.
4. Press (Hz %) once to select frequency. Hz appears on the display. Press (RANGE) repeatedly to step to the 6 V range. "6" should appear at the right side of the display. Use (ıı)) to change trigger slope.
5. With the ignition KEY ON but the ENGINE OFF (KOEO), pump the vacuum up.
6. Watch the frequency change on the display. Compare the frequency at various vacuum readings with the specifications in the vehicle's service manual. At 0 inches of mercury, the frequency should match specification for your altitude.

Note

Frequency measurements can be made on voltage (V dc, V ac, or mV dc) or current inputs (mA/A ac or dc). In automotive applications, however, most Frequency measurements will be made using the volts ac function.

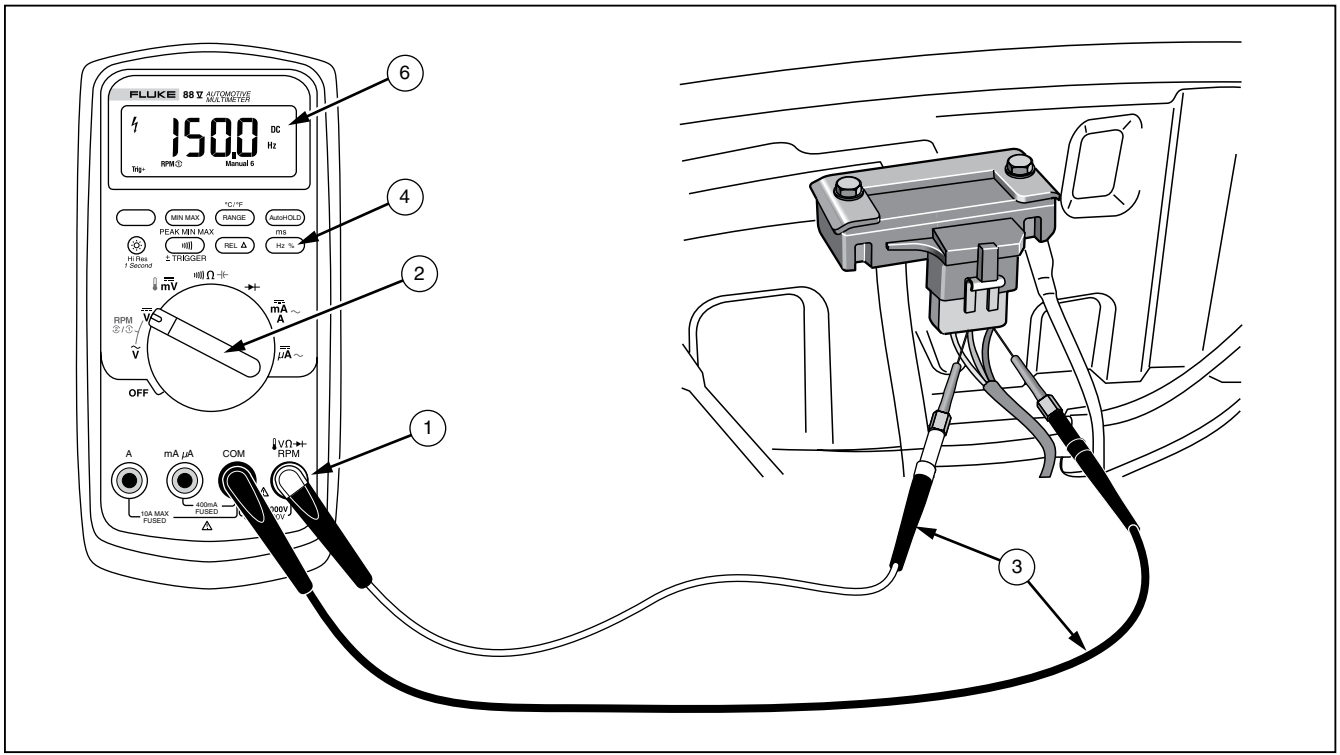

ayg22f.eps

Figure 10. Testing MAP or BP/MAP Sensors with Frequency Output

Measuring Internal Resistance of an Ignition Coil

When measuring resistance, be sure that the contact between the probes and the circuit is clean. Dirt, oil, paint, rust or other foreign matter seriously affect resistance. Measure resistance in the primary and secondary coils when the coil is hot and cold.

1. Insert test leads in the input terminals shown in Figure 11.
2. Turn rotary switch to))))) Ω ⊣⊢.
3. Touch the probes as shown to measure resistance in primary windings.
4. Observe display. Resistance should be less than a few ohms.
5. Touch probes as shown to measure resistance in secondary windings.
6. Observe display. Resistance should typically be about 10 k.

⚠⚠Warning

To avoid possible electric shock or damage to the Meter turn engine off before making measurements.

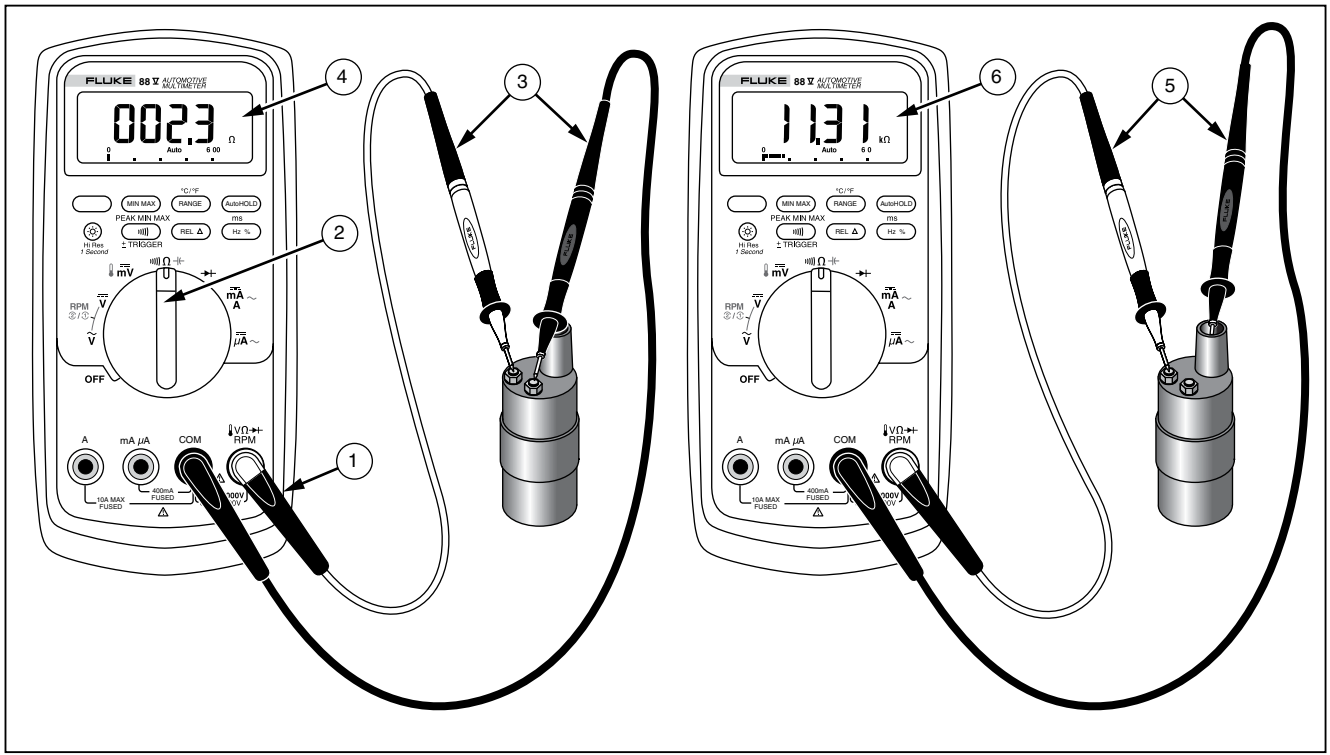

ayg11f.eps

Figure 11. Measuring Internal Resistance on an Ignition Coil

Measuring Pulse Width on a Port Fuel Injector

In Pulse Width (and Duty Cycle), the meter defaults to (-) trigger slope; (time signal is low). Press (±) (± TRIGGER) to toggle between (±) trigger slopes. The slope is indicated by the + or - sign next to “Trig” in the lower-left corner of the display.

To measure pulse width on most port fuel injectors:

1. Insert test leads in the input terminals shown in Figure 12.
2. Set the rotary switch to $\overline{\overline{V}}$.
3. Connect the test leads as shown.
4. Press (Hz %) three times to select Pulse Width. The display shows ms.
5. Start the engine. Read the display.

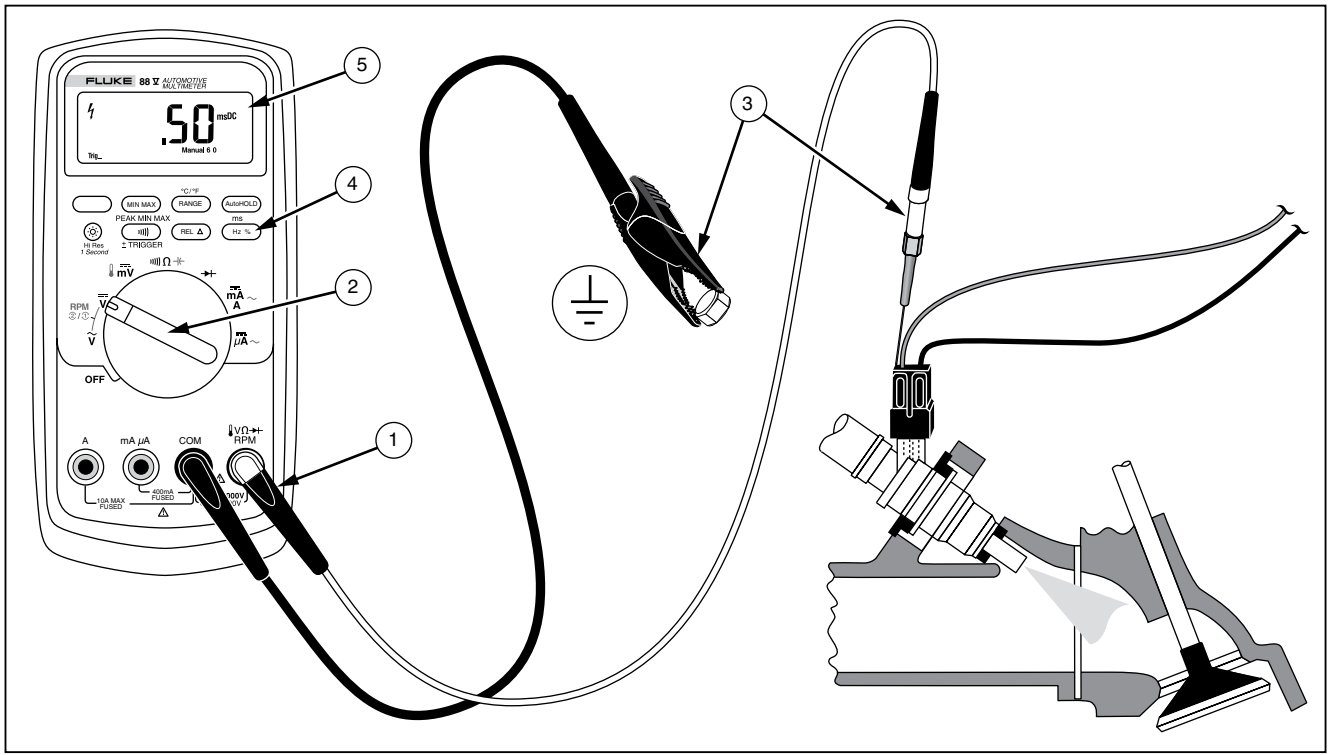

ayg12f.eps

Figure 12. Measuring Pulse Width on a Port Fuel Injector

Testing Ripple Voltage on an Alternator

Ripple voltage or ac voltage can be measured by switching your meter to ac and connecting the black lead to a good ground and the red lead to the “BAT” terminal on the back of the alternator (not at the battery).

1. Insert the test leads as shown in Figure 13.
2. Set the rotary switch to $\tilde{V}$.
3. Touch the red probe to the “BAT” side of the alternator and the black probe to ground.
4. Read the display. A good alternator should measure less than 0.5 V ac with the engine running. A higher reading indicates damaged alternator diodes.

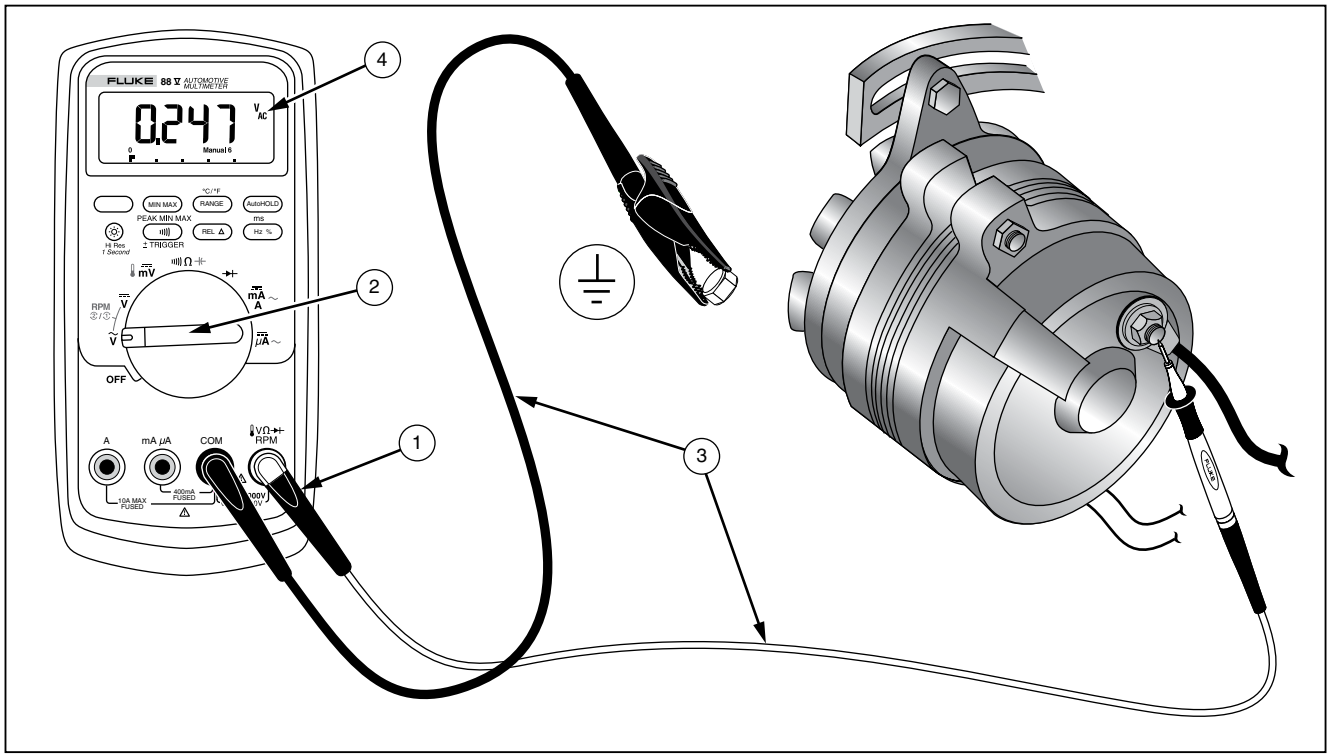

ayg16f.eps

Figure 13. Testing Ripple Voltage on an Alternator

Measuring Voltages on a Typical Oxygen Sensor

Watch the bar graph sweep as oxygen voltage changes. Depending on the driving conditions, the oxygen voltage will rise and fall, but it usually averages around 0.450 V dc.

1. Shut the engine off and insert test lead in the input terminals shown in Figure 14.
2. Set the rotary switch to $\overline{\overline{\mathbf{V}}}$.
3. Press (RANGE) three times to select the 6 V range.
4. Connect the test leads as shown.
5. Start the engine. If the oxygen sensor is unheated, fast-idle the car for a few minutes. Then press (MIN MAX) to select MIN MAX Recording.
6. Press the (MIN MAX) button to display maximum (MAX) oxygen voltage; press again to display minimum (MIN) voltage; press again to display average (AVG) voltage; press and hold down MIN MAX for 2 seconds to exit.

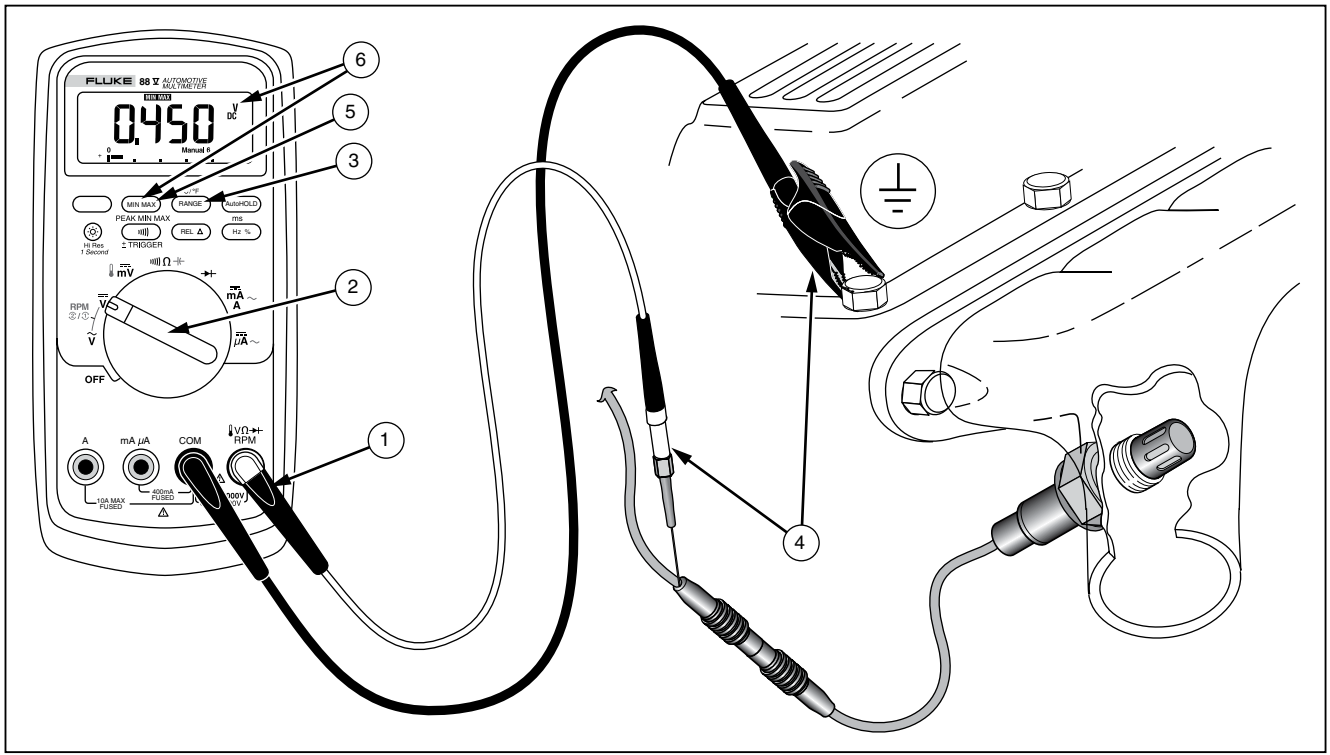

ayg14f.eps

Figure 14. Measuring Voltages on a Typical Oxygen Sensor

Measuring Starter Circuit Voltage Drop

Since AutoHOLD ignores readings of 0, it will retain the voltage drop after you quit cranking.

1. Insert test leads in the input terminals shown in Figure 15.
2. Set the rotary switch to 🌡 mV. If you are measuring over 600 mV, "OL" will appear. Switch to V and select the 6 V range.
3. Press (AutoHOLD), HOLD is displayed.
4. Touch probes across the connection to be measured.
5. Crank engine 4-5 seconds. Meter holds voltage drop between the probes on the display.
6. Press (AutoHOLD) again to exit AutoHOLD.

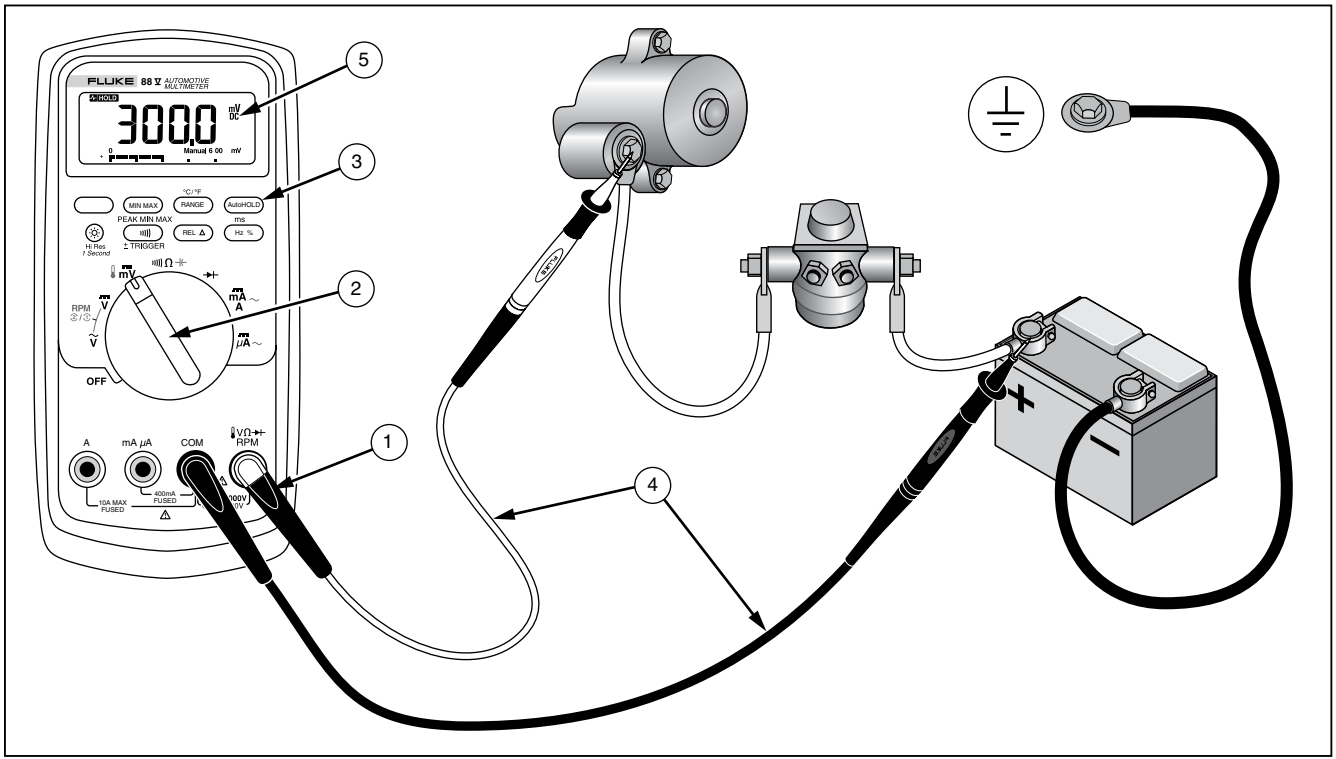

ayg17f.eps

Figure 15. Measuring Starter Circuit Voltage Drop

Testing the Throttle Position Sensor Voltage

The throttle position sensor sends a signal to the computer indicating the position of the throttle. To test the throttle position sensor:

1. Insert test leads in the input terminals shown in Figure 16.
2. Turn the ignition KEY ON but the ENGINE OFF (KOEO).
3. Set the rotary switch to $\overline{\overline{V}}$ and press (RANGE) three times to step to the 6 V range.
4. Press (MIN MAX) and (ıı)) to enable peak MIN MAX mode.
5. Connect the test leads as shown Figure 16.
6. Rotate the throttle plate to full open and back to the throttle stop to test the full motion of the sensor. Press (MIN MAX) to read the minimum and maximum values.

Testing the Throttle Position Sensor Resistance

1. Insert test leads in the input terminals shown in Figure 16.
2. Set the rotary switch to ıı)) Ω ⊣⊢.
3. Press (RANGE) to select Manual range. Press (RANGE) to repeatedly to stip to the 6 kΩ range.
4. Connect the test leads as shown in Figure 16.
5. Rotate the throttle position sensor by moving the throttle.
6. Look at the display and read the bar graph.

   As you rotate the throttle position sensor to change resistance, the display should move smoothly (not erratically).

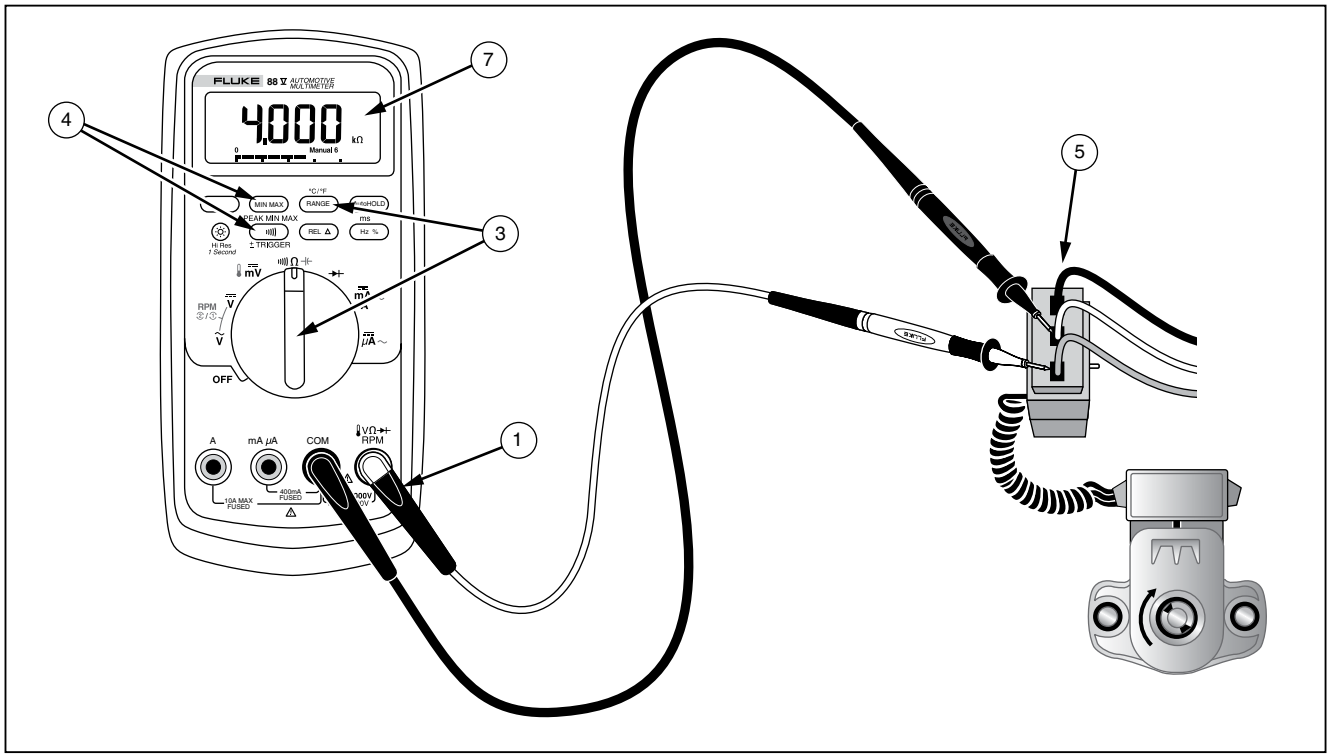

ayg15f.eps

Figure 16. Testing the Throttle Position Sensor Resistance

Isolating a Circuit Causing a Current Drain

1. Insert the test leads in the input terminals shown in Figure 17.
2. Turn switch to mA/A ~.
3. Disconnect battery terminal and touch probes as shown.

   Note

   Use a battery isolator momentarily while connecting the meter to retain PCM memory.

4. Isolate circuit causing current drain by pulling out one fuse after another while reading the display.
5. Current reading will drop when the fuse on the bad circuit is pulled.
6. Reinstall fuse and test components (including connectors) of that circuit to find defective component(s).

⚠⚠Warning

To avoid electric shock or personal injury, do not attempt this test on a lead-acid battery that has recently been recharged.

⚠⚠Caution

Do not crank the engine or operate accessories that draw more than 10 A. You could blow the fuse in the Meter.

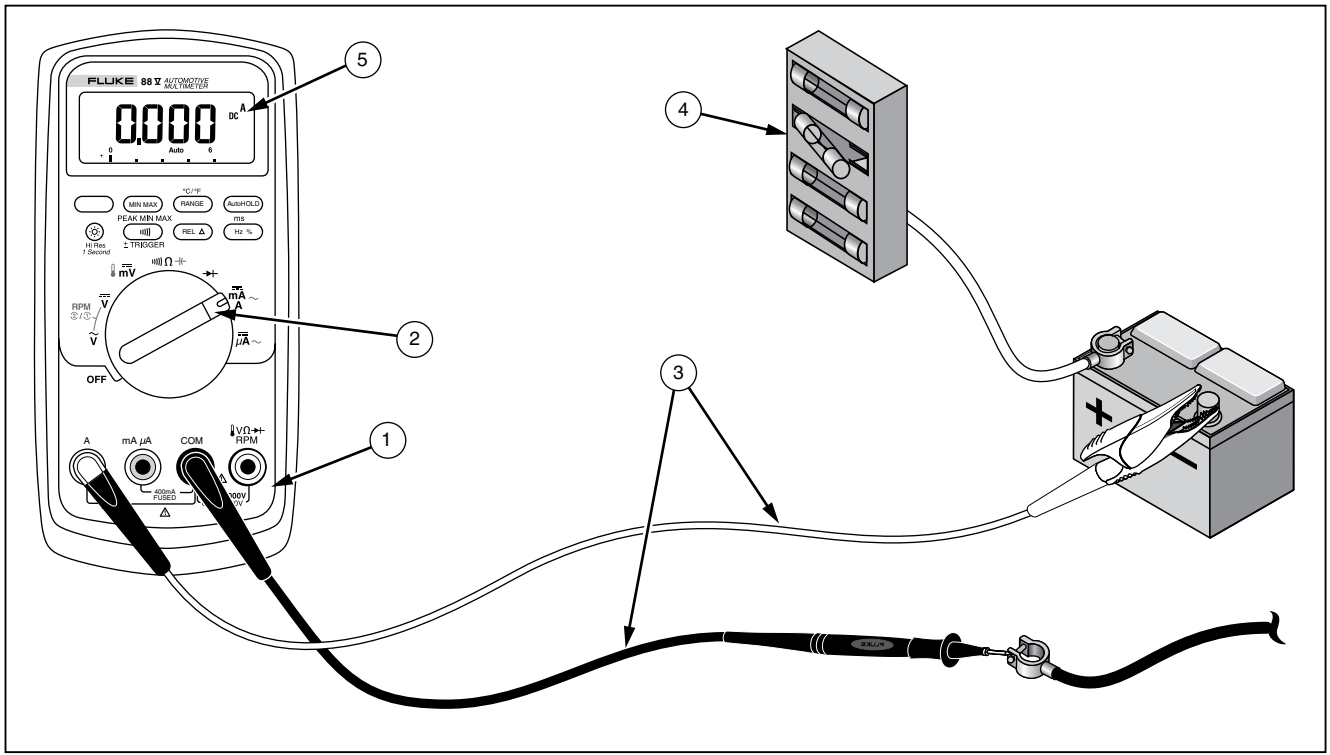

ayg18f.eps

Figure 17. Isolating Circuit Causing Current Drain

Measuring System Voltage

Bleed the surface charge from the battery by turning the headlights on for 1 minute. Measure the voltage across the battery terminal with the lights off. When possible, individual cell specific gravity should be checked with a hydrometer. A load test should be done to indicate battery performance under load. Voltage tests only tell the state of charge, not the battery condition. To measure system voltage:

1. Insert test leads in the input terminals shown in Figure 18.
2. Set the switch to $\overline{\overline{\mathbf{V}}}$.
3. Turn on lights for 1 minute to bleed off surface charge.
4. Turn lights off and touch probes to circuit.
5. Read the display. A fully charged battery typically shows about 12.6 V. See other typical values in Table 9.

Table 9. Battery Charge Voltages

Voltage	% Charge
12.60 to 12.72 V	100
12.45 V	75
12.30 V	50
12.15 V	25
Readings obtained at 80 °F (27 °C)	

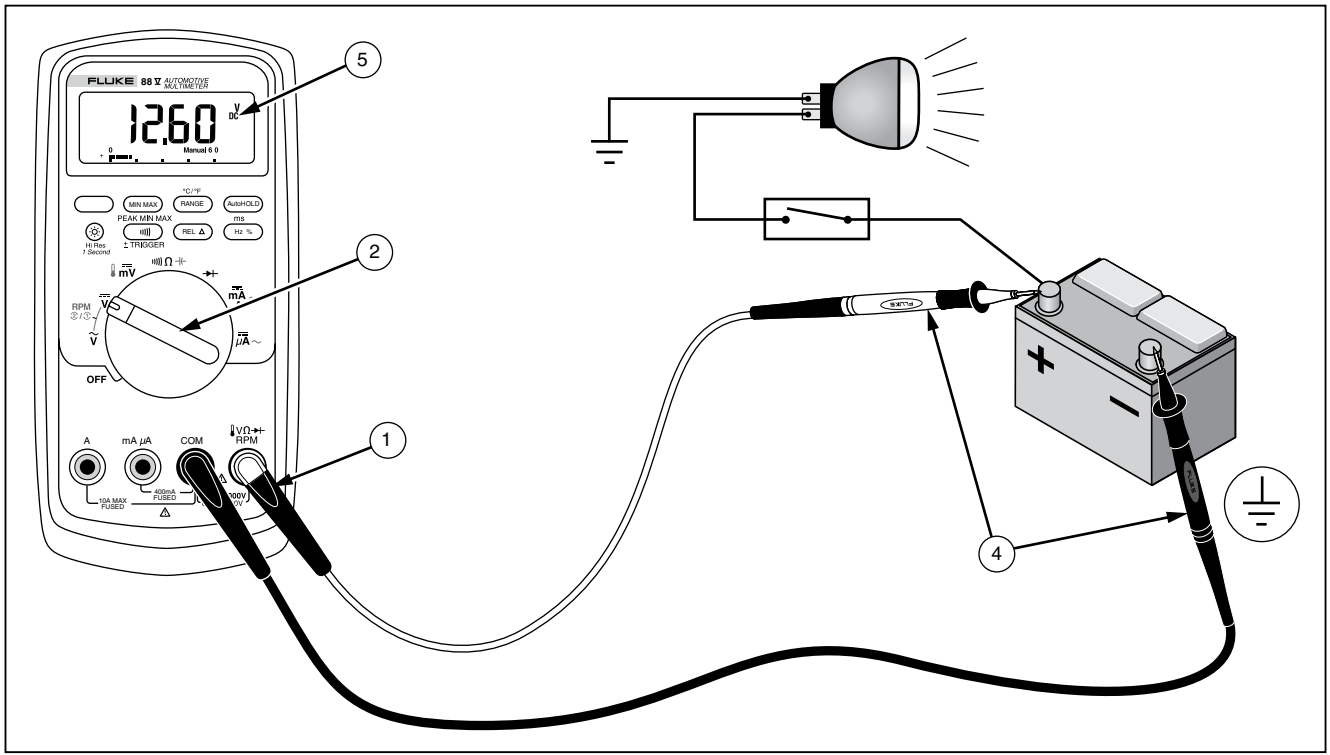

ayg19f.eps

Figure 18. Measuring the No-Load Voltage of a Battery

Testing for Continuity in a Switch

A continuity test verifies that you have a closed circuit. The continuity function detects opens or shorts as fast as 1 millisecond. This can be a valuable trouble-shooting aid when looking for intermittents associated with cables, connections, switches, and relays.

1. Insert test leads in the input terminals shown in Figure 19.
2. Turn rotary switch to))))) Ω ⊣⊢.
3. Press the ())))) button.
4. Connect probes to stoplight switch.
5. Press brake pedal and listen for tone. If tone sounds, stoplight switch is good.

⚠⚠Caution

To avoid possible damage to the meter or to equipment under test, disconnect the power to the circuit under test and discharge all high voltage capacitors before testing resistance, continuity or diodes.

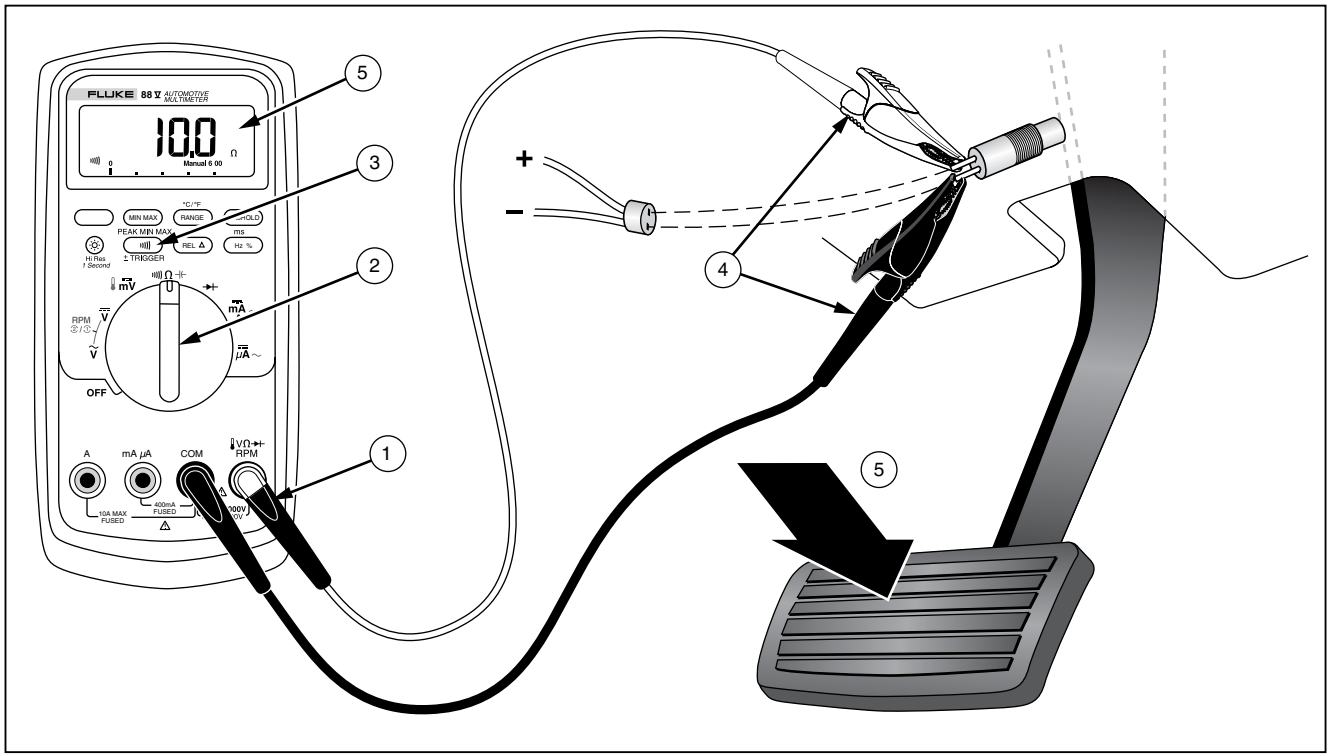

ayg20f.eps

Figure 19. Testing for Continuity in a Switch

Maintenance

⚠⚠Warning

To avoid possible electric shock or personal injury, repairs or servicing not covered in this manual should be performed only by qualified personnel.

General Maintenance

Periodically wipe the case with a damp cloth and mild detergent. Do not use abrasives or solvents.

Dirt or moisture in the terminals can affect readings and can falsely activate the Input Alert feature. Clean the terminals as follows:

1. Turn the Meter off and remove all test leads.
2. Shake out any dirt that may be in the terminals.
3. Soak a new swab with a cleaning and oiling agent (such as WD-40). Work the swab around in each terminal. The oiling agent insulates the terminals from moisture-related activation of the Input Alert feature.

Note

Do not spray lubricant directly on the terminals.

Testing the Fuse

If a test lead is plugged into the **mA/µA** or **A** terminal and the rotary switch is turned to a non-current function, the Meter chirps and flashes "LEAd" if the fuse associated with that current terminal is good. If the Meter does not chirp or flash "LEAd", the fuse is bad and must be replaced. Refer to Table 10 for the appropriate replacement fuse.

To test the quality of the fuse and the current shunt: before measuring current, set rotary switch to))))Ω⊣⊢ and test the appropriate fuse as shown in Figure 20. If the tests give readings other than those shown, have the Meter serviced.

⚠⚠Warning

To avoid electrical shock or personal injury, remove the test leads and any input signals before replacing the battery or fuses. To prevent damage or injury, install ONLY specified replacement fuses with the amperage, voltage, and speed ratings shown in Table 10.

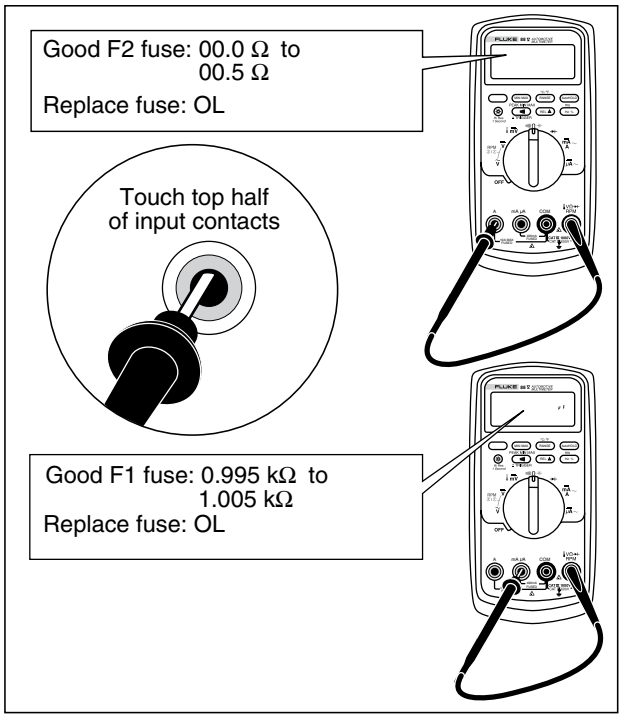

ayg05f.eps

Figure 20. Testing the Current Fuses

Replacing the Battery

Replace the battery with a 9 V battery (NEDA A1604, 6F22, or 006P).

⚠⚠Warning

To avoid false readings, which could lead to possible electric shock or personal injury, replace the battery as soon as the battery indicator (▬) appears. If the display shows "bAtt" the Meter will not function until the battery is replaced.

Replace the battery as follows, refer to Figure 21:

1. Turn the rotary switch to OFF and remove the test leads from the terminals.
2. Remove the battery door by using a standard-blade screwdriver to turn the battery door screws one-quarter turn counterclockwise.
3. Replace the battery and the battery door. Secure the door by turning the screws one-quarter turn clockwise.

Replacing the Fuses

Referring to Figure 21, examine or replace the Meter's fuses as follows:

1. Turn the rotary switch to OFF and remove the test leads from the terminals.
2. Remove the battery door by using a standard-blade screwdriver to turn the battery door screws one-quarter turn counterclockwise.
3. Remove the three Phillips-head screws from the case bottom and turn the case over.
4. Gently push up the input terminal-end of the top case from inside the battery compartment to separate the two halves of the case.
5. Remove the fuse by gently prying one end loose, then sliding the fuse out of its bracket.
6. Install ONLY specified replacement fuses with the amperage, voltage, and speed ratings shown in Table 10.
7. Verify that the rotary switch and the circuit board switch are in the OFF position.
8. Replace the case top, ensuring that the gasket is properly seated and case snaps together above the LCD.
9. Reinstall the three screws and the battery door. Secure the door by turning the screws one-quarter turn clockwise.

Service and Parts

If the Meter fails, check the battery and fuses. Review this manual to verify proper use of the Meter.

Replacement parts and accessories are shown in Tables 10 and 11 and Figure 22.

To order parts and accessories, refer to “Contacting Fluke”.

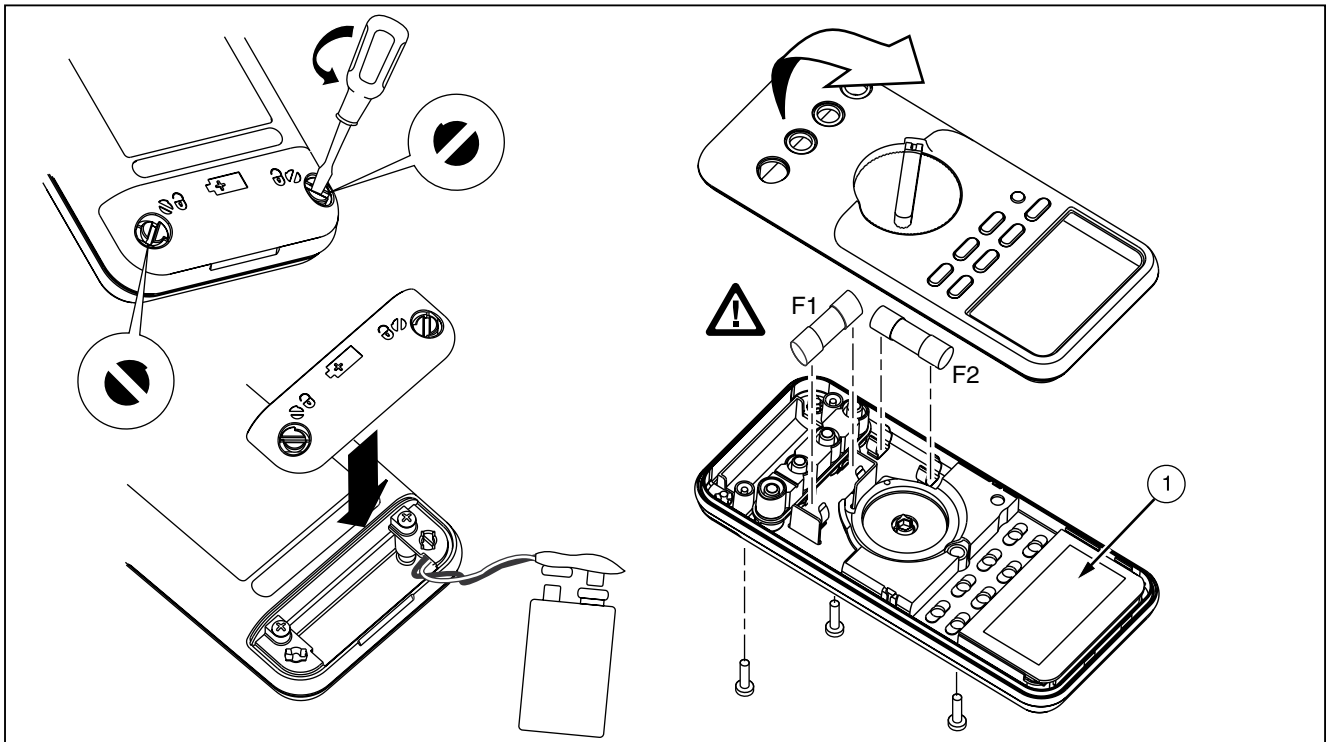

ayg33f.eps

Figure 21. Battery and Fuse Replacement

Table 10. Replacement Parts

Item	Description	Qty.	Fluke Part or Model Number
BT1	Battery, 9 V	1	2139179
F1 ⚠	Fuse, 0.440 A, 1000 V, FAST	1	943121
F2 ⚠	Fuse, 11 A, 1000 V, FAST	1	803293
H2-4	Screw, Case	3	832246
H5-9	Screw, Bottom Shield	5	448456
J1-2	Elastomeric Connector	2	817460
MP10-11	Foot, Non-Skid	2	824466
MP2	Shield, Top	1	2073906
MP4	Shield, Bottom	1	2074025
MP5	Case Top (PAD XFER) with Window 88 V	1	2115202
MP6	Case Bottom	1	2073871
MP8	Knob, Switch (PAD XFER)	1	2100482
MP9	Detent, Knob	1	822643
MP13	Shock Absorber	1	828541
MP14	O-Ring, Input Receptacle	1	831933
MP15	Holster	1	2074033
	Tilt Stand	1	2074040
MP22	Battery Door	1	2073938
MP27-MP30	Contact RSOB	4	1567683
MP31	Mask, LCD (PAD XFER) 88 V	1	2112410
MP41	Housing, RSOB	1	2073945

⚠To ensure safety, use exact replacement only.

Table 10. Replacement Parts (cont.)

Item	Description	Qty.	Fluke Part or Model Number
MP390-391	Access Door Fastener	2	948609
U5	LCD, 4.5 DIGIT,TN, Transflective, Bar Graph, OSPR80	1	2065213
CR6	Light pipe	1	2074057
S2	Keypad	1	2105884
TM1	*Model 88 V Automotive Multimeter Users Manual* (this manual)	1	2166623
TM2	*Model 88 V Automotive Multimeter Quick Reference Card*	1	2279006
TM3	CD ROM, 88	1	2278999

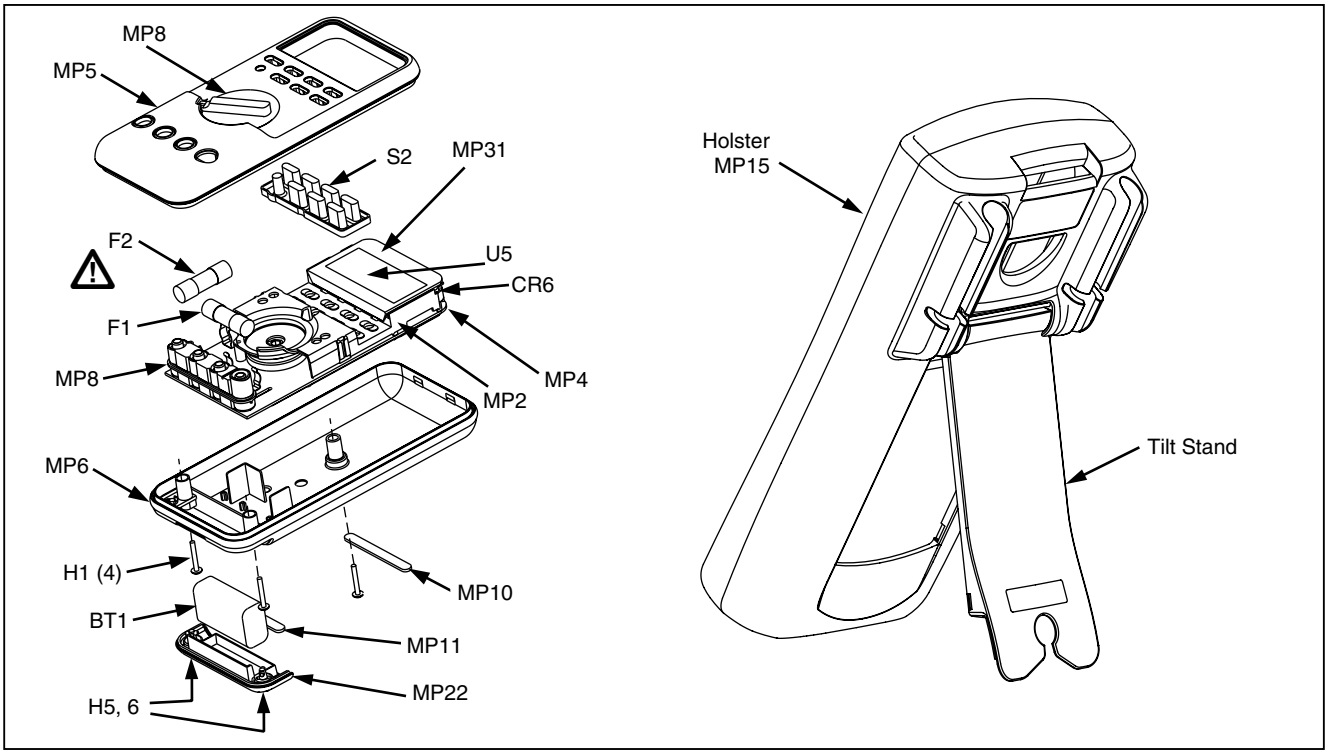

ayg34f.eps

Figure 22. Replaceable Parts

Table 11. Accessories

Item	Description
80BK	Integrated Temperature Probe (included)
80AK	Thermocouple Adapter
AC280	Sure Grip Clip Hook Clips (included)
AC285	Sure Grip Wide-Jaw Alligator Clips
AC89	Insulation Piercing Clip
PV350	Pressure Vacuum Module
RPM80	Inductive Clamp (included)
TL224	Sure Grip Test Lead Set, Heat-Resistant Silicone (included)
TL71	Silicone Insulated Test Lead Set
TP220	Sure Grip Test Probe Set (included)
TPAK	ToolPak Magnetic Hanger (included)
Fluke accessories are available from an authorized Fluke distributor.	

Specifications

General Specifications

Maximum Voltage between any Terminal and Earth Ground: ..... 1000 V

⚠ **Fuse Protection for mA or µA inputs**: ..... 44/100 A, 1000 V FAST Fuse

⚠ **Fuse Protection for A input:** ..... 11 A, 1000 V FAST Fuse

Display: ..... Digital: 6000 counts updates 4/sec; (the Meter also has 19,999 counts in high-resolution mode). Analog Bar Graph: 33 segments, updates 40/sec. Frequency: 19,999 counts, updates 3/sec at > 10 Hz.

Temperature: Operating: ..... -20 °C to +55 °C; Storage: -40 °C to +60 °C

Altitude: ..... Operating: 2000 m; Storage:10,000 m

Temperature Coefficient: ..... 0.05 x (specified accuracy)/ °C (< 18 °C or > 28 °C)

Electromagnetic Compatibility: ..... All ranges unless otherwise noted: In an RF field of 3 V/m total accuracy = specified accuracy + 20 counts
Except: 600 µA dc range total accuracy = specified accuracy + 60 counts. Temperature not specified.
All ac ranges = specified accuracy + 70 counts.

Relative Humidity: ..... 0 % to 90 % (0 °C to 35 °C); 0 % to 70 % (35 °C to 55 °C)

Battery Type: ..... 9 V zinc, NEDA 1604 or 6F22 or 006P

Battery Life: ..... 400 hrs typical with alkaline (with backlight off)

Vibration: ..... Per MIL-PRF-28800 for a Class 2 instrument

Shock: ..... 1 Meter drop per IEC 61010-1:2001

Size (HxWxL): ..... 1.25 in x 3.41 in x 7.35 in (3.1 cm x 8.6 cm x 18.6 cm)

Size with Holster and Flex-Stand: ..... 2.06 in x 3.86 in x 7.93 in (5.2 cm x 9.8 cm x 20.1 cm)

Weight: ..... 12.5 oz (355 g)

Weight with Holster and Flex-Stand: ..... 22.0 oz (624 g)

Safety: ..... Complies with ANSI/ISA S82.01-2004, CSA 22.2 No. 1010.1:2004 to 1000 V Overvoltage Category III, IEC 664 to 600 V Overvoltage Category IV. UL listed to UL61010-1. Licensed by TÜV to EN61010-1.

Detailed Specifications

For all detailed specifications:

Accuracy is given as ± ([% of reading] + [number of least significant digits]) at 18° C to 28° C, with relative humidity up to 90 %, for a period of one year after calibration. AC conversions are ac coupled and are average responding, rms indicating.

Table 12. AC Voltage Function Specifications

Function	Range	Resolution	Accuracy		
			50 Hz - 60 Hz	30 Hz - 1 kHz	1 kHz - 5 kHz
$\tilde{V}$[1]	600.0 mV	0.1 mV	± (0.5 % + 4)	± (1.0 % + 4)	± (2.0 % + 4)
	6.000 V	0.001 V	± (0.5 % + 2)	± (1.0 % + 4)	± (2.0 % + 4)
	60.00 V	0.01 V	± (0.5 % + 2)	± (1.0 % + 4)	± (2.0 % + 4)
	600.0 V	0.1 V	± (0.5 % + 2)	± (1.0 % + 4)	± (2.0 % + 4)[2]
	1000 V	1 V	± (0.5 % + 2)	± (1.0 % + 4)	unspecified

1. Below a reading of 200 counts, add 10 counts.
2. Frequency range: 1 kHz to 2.5 kHz.

Table 13. DC Voltage, Resistance, and Conductance Function Specifications

Function	Range	Resolution	Accuracy
V	6.000 V 60.00 V 600.0 V 1000 V	0.001 V 0.01 V 0.1 V 1 V	± (0.1 % + 1) ± (0.1 % + 1) ± (0.1 % + 1) ± (0.1 % + 1)
mV	600.0 mV	0.1 mV	± (0.3 % + 1)
Ω nS	600.0 Ω 6.000 kΩ 60.00 kΩ 600.0 kΩ 6.000 MΩ 50.00 MΩ 60.00 nS	0.1 Ω 0.001 kΩ 0.01 kΩ 0.1 kΩ 0.001 MΩ 0.01 MΩ 0.01 nS	± (0.4 % + 2)[1] ± (0.4 % + 1) ± (0.4 % + 1) ± (0.7 % + 1) ± (0.7 % + 1) ± (1.0 % + 3) [2] ± (1.0 % + 10)[1]

1. When using the REL Δ function to compensate for offsets.
2. Add 0.5 % of reading when measuring above 30 MΩ in the 50 MΩ range, and 20 counts below 33 nS in the 60 nS range.

Table 14. Temperature Specifications

Temperature	Resolution	Accuracy[1,2]
- 200 °C to + 1090 °C	0.1 °C	1 % + 10
- 328 °F to + 1994 °F	0.1 °F	1 % + 18

1. Does not include error of the thermocouple probe.
2. Accuracy specification assumes ambient temperature stable to ± 1 °C. For ambient temperature changes of ± 5 °C, rated accuracy applies after 1 hour.

Table 15. Current Function Specifications

Function	Range	Resolution	Accuracy[1]	Burden Voltage (typical)
mA A~ (45 Hz to 2 kHz)	60.00 mA	0.01 mA	± (1.2 % + 2) [3]	1.8 mV/mA
	400.0 mA[4]	0.1 mA	± (1.2 % + 2) [3]	1.8 mV/mA
	6.000 A	0.001 A	± (1.2 % + 2) [3]	0.03 V/A
	10.00 A[2]	0.01 A	± (1.2 % + 2) [3]	0.03 V/A
mA A⎓	60.00 mA	0.01 mA	± (0.4 % + 4)	1.8 mV/mA
	400.0 mA[4]	0.1 mA	± (0.4 % + 2)	1.8 mV/mA
	6.000 A	0.001 A	± (0.4 % + 4)	0.03 V/A
	10.00 A[2]	0.01 A	± (0.4 % + 2)	0.03 V/A
µA ~ (45 Hz to 2 kHz)	600.0 µA	0.1 µA	± (1.2 % + 2)[3]	100 µV/µA
	6000 µA	1 µA	± (1.2 % + 2)[3]	100 µV/µA
µA⎓	600.0 µA	0.1 µA	± (0.4 % + 4)	100 µV/µA
	6000 µA	1 µA	± (0.4 % + 2)	100 µV/µA

1. AC conversion is ac coupled and calibrated to the rms value of a sine wave input.
2. ⚠ 10 A continuous up to 35 °C; < 20 minutes on, 5 minutes off at 35 °C to 55 °C. 20 A for 30 seconds maximum; > 10 A unspecified.
3. Below a reading of 200 counts, add 10 counts.
4. 400 mA continuous; 600 mA for 18 hrs maximum.

Table 16. Capacitance and Diode Function Specifications

Function	Range	Resolution	Accuracy
⊣⊢	10.00 nF 100.0 nF 1.000 µF 10.00 µF 100.0 µF 9999 µF	0.01 nF 0. 1 nF 0.001 µF 0.01 µF 0.1 µF 1 µF	± (1 % + 2)[1] ± (1 % + 2)[1] ± (1 % + 2) ± (1 % + 2) ± (1 % + 2) ± (1 % + 2)
⊣▶⊢	3.000 V	0.001 V	± (2 % + 1)

1. With a film capacitor or better, using Relative mode to zero residual.

Table 17. Frequency Counter Specifications

Function	Range	Resolution	Accuracy	Pulse Width Range (ms)[1]	Resolution (ms)
Frequency[2] (0.5 Hz to 200 kHz, pulse width > 2 µs)	199.99 1999.9 19.999 kHz 199.99 kHz > 200 kHz	0.01 Hz 0.1 Hz 0.001 kHz 0.01 kHz 0.1 kHz	± (0.01 % + 1) ± (0.01 % + 1) ± (0.01 % + 1) ± (0.01 % + 1) unspecified	1999.9 5.00 0.500 0.0500	0.1 0.01 0.001 0.0001
RPM ①	30 to 9,000[4]	1 RPM	± 2 RPM		
RPM ②	60 to 12,000[4]	1 RPM	± 2 RPM		
% Duty Cycle[3]	0.0 to 99.9% (0.5 Hz to 200 kHz, Pulse Width >2 µs)				
Pulse Width[3]	0.002 to 1999.9 ms (4 Hz to 200 kHz, Pulse Width >2 µs)				

1. Pulse Width range is determined by the frequency of the signal.
2. Frequency measurements can be made on voltage or current inputs. The current inputs are always dc coupled.
3. For rise times <1 µs. Duty Cycle Accuracy: ±(0.2 % per kHz + 0.1%). Pulse Width Accuracy: ±(0.002 ms + 3).
4. Using the RPM80 probe.

Table 18. Frequency Counter Sensitivity and Trigger Levels

Input Range[1]	Minimum Sensitivity		Approximate Trigger Level (DC Voltage Function)
	5 Hz - 20 kHz	0.5 Hz - 200 kHz	
600 mV dc	70 mV (to 400 Hz)	70 mV (to 400 Hz)	40 mV
600 mV ac	150 mV	150 mV	—
6 V	0.3 V	0.7 V	1.7 V
60 V	3 V	7 V (≤140 kHz)	4 V
600 V	30 V	70 V (≤14.0 kHz)	40 V
1000 V	100 V	200 V (≤1.4 kHz)	100 V

1. Maximum input for specified accuracy = 10X range or 1000 V.

Table 19. Electrical Characteristics of the Terminals

Function	Overload Protection[1]	Input Impedance (nominal)	Common Mode Rejection Ratio (1 kΩ unbalance)		Normal Mode Rejection					
V̅	1000 V	10 MΩ < 100 pF	> 120 dB at dc, 50 Hz or 60 Hz		> 60 dB at 50 Hz or 60 Hz					
mV̅	1000 V	10 MΩ < 100 pF	> 120 dB at dc, 50 Hz or 60 Hz		> 60 dB at 50 Hz or 60 Hz					
Ṽ	1000 V	10 MΩ < 100 pF (ac-coupled)	> 60 dB, dc to 60 Hz							
		Open Circuit Test Voltage	**Full Scale Voltage**		**Typical Short Circuit Current**					
			To 6.0 MΩ	**50 MΩ or 60 nS**	**600 Ω**	**6 k**	**60 k**	**600 k**	**6 M**	**50 M**
Ω	1000 V	< 7.5 V dc	< 4.1 V dc	< 4.5 V dc	1 mA	100 µA	10 µA	1µA	1 µA	0.5 µA
⊣▶⊢	1000 V	< 3.9 V dc	3.000 V dc		0.6 mA typical					

1. 10^6 V Hz max

Table 20. Min Max Recording Specifications

Nominal Response	Accuracy
100 ms to 80 % (dc functions)	Specified accuracy ± 12 counts for changes > 200 ms in duration
120 ms to 80 % (ac functions)	Specified accuracy ± 40 counts for changes > 350 ms and inputs > 25 % of range
250 µs (peak)[1]	Specified accuracy ± 100 counts for changes > 250 µs in duration (add ± 100 counts for readings over 6000 counts)

1. For repetitive peaks: 1 ms for single events.