THIS IS ISSUED IN STRICT CONFIDENCE THAT IT IS NOT USED AS A BASIS FOR MANUFACTURE OR SALE AND THAT IT IS NOT COPIED, REPRINTED OR DISCLOSED TO A THIRD PARTY EITHER WHOLLY OR IN PART WITHOUT THE PRIOR WRITTEN CONSENT OF CAL TEST ELECTRONICS, INC.

Test Equipment Depot
99 Washington St. Melrose MA, 02176
1.800.517.8431 | 781.665.0780 (Fax)
Visit us at www.TestEquipmentDepot.com

REVISIONS

REV.	DESCRIPTIONS	DATE	APPROVED
–	CLASS A RELEASED	7/12/99	
A	NOTE 3: ADDED IEC 61010–031 600 CAT IV & RoHS; REVISED PLUG CONFIGURATION, PAGE 2.	2/7/05	

1. 4mm BANANA PLUG LEAD, STACKING SHEATHED PLUG TO STACKING SHEATHED PLUG, 0.75mm2, SILICONE JACKETED WIRE.
   CE MARK AND CSA LISTED (US AND CANADA).

2. SPECIFICATIONS:
   WIRE:
   REINFORCED SILICONE (–60° C TO +180° C)
   195x0.07mm STRANDED BARE COPPER, 0.75mm2 CROSS SECTION, 18 AWG, Ø.146±.008 (Ø3.7±0.2mm) O.D.

   INSULATED HOUSING:
   POLYPROPYLENE THERMOPLASTIC, UL94V–0.

   CONTACT:
   4mm, 9 LEAF, BERYLLIUM COPPER, NICKEL PLATED.
   PLUG BODY:
   BRASS, NICKEL PLATED.

3. RATING:
   IEC 61010–031 @ 600 V CAT IV – 1,000 V CAT III P2.
   CURRENT: 12 A MAX.
   INTERNAL RESISTANCE: 55 mΩ MAX @ 200 cm LENGTH.
   TEMPERATURE: –25° C TO +80° C.

   CE DECLARATION OF CONFORMITY, LVD
   CONFORMS TO RoHS DIRECTIVE 2002/95/EC.

CE CSA C US

PART NUMBER

CT2521–L–#

COLOR:
0 – BLACK
2 – RED
4 – YELLOW
5 – GREEN
6 – BLUE
9 – WHITE

LENGTH: (CENTIMETERS)
STANDARDS: 10, 25, 50, 100, 150, 200

THIRD ANGLE PROJECTION

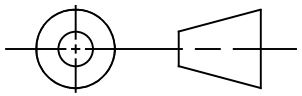

NEXT ASSY | USED ON

APPLICATION

UNLESS OTHERWISE SPECIFIED DIMENSIONS ARE IN INCHES
TOLERANCES ARE:
FRACTIONS ± 1/32
DECIMALS .XX ± .02 .XXX ±.005
DO NOT SCALE DRAWING

MATERIAL

FINISH

CONTRACT NO.

APPROVALS		DATE
DRAWN	WDH	7/12/99
CHECKED		
ENGR.		
DESIGN ACTIVITY		

Cal Test Electronics
22820 Savi Ranch Parkway
Yorba Linda, CA

TITLE
LEAD, 4mm STACKING SHEATHED PLUGS, 0.75mm2, SILICONE

SIZE	CAGE CODE	DWG. NO.	REV.
A	43F45	P252100	A

SCALE NONE | SHEET 1 OF 2

THIS IS ISSUED IN STRICT CONFIDENCE THAT IT IS NOT USED AS A BASIS FOR MANUFACTURE OR SALE AND THAT IT IS NOT COPIED, REPRINTED OR DISCLOSED TO A THIRD PARTY EITHER WHOLLY OR IN PART WITHOUT THE PRIOR WRITTEN CONSENT OF CAL TEST ELECTRONICS, INC.

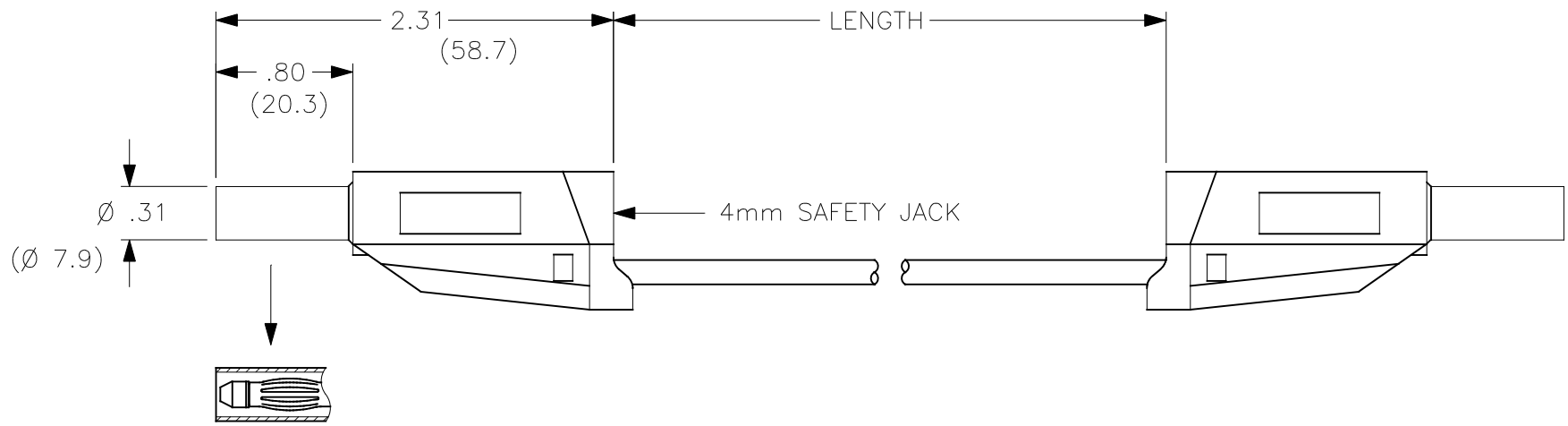

DRAWN WDH	7/12/99	SIZE A	CAGE CODE 43F45	DWG. NO. P252100	REV. A
CHECKED		SCALE 1:1			SHEET 2